ELCO Lighting

INSTALLATION INSTRUCTIONS

8” LED ULTRA SLIM PANEL LIGHT - MODEL ERT81DXCT5W
Rated Voltage 120/277/347V, 60Hz

Please read carefully and save these instructions as you may need them at a later date.

WARNING - RISK OF ELECTRIC SHOCK. DISCONNECT MAIN POWER AT FUSE OR CIRCUIT BREAKER BEFORE INSTALLING OR SERVICING THE FIXTURE.

GENERAL: All electrical connections must be in accordance with local and National Electrical Code (N.E.C.) standards. If you are unfamiliar with proper electrical wiring connections obtain the services of a qualified electrician.

Remove the KIT from the box and make sure that no parts are missing by referencing the PARTS illustrations.

THIS RETROFIT ASSEMBLY IS ACCEPTED AS A COMPONENT OF A LED LUMINAIRE WHERE THE SUITABILITY OF THE COMBINATION SHALL BE DETERMINED BY CSA OR CANADIAN AUTHORITIES HAVING JURISDICTION.

THIS DEVICE IS NOT INTENDED FOR USE WITH EMERGENCY EXITS.

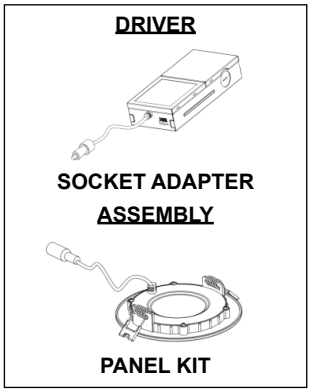

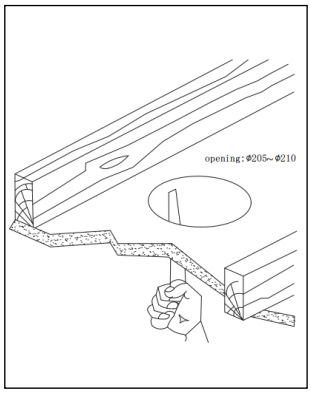

WARNING- RISK OF FIRE OR ELECTRIC SHOCK

- LED Ultra Slim Panel kit installation requires knowledge of luminaires electrical systems. If not qualified, do not attempt installation. Contact a qualified electrician.
- Install this kit only in luminaires that have the construction features and dimensions shown in the photographs and/or drawings and where the input rating of the panel kit does not exceed the input rating of the luminaire.
- Do not make or alter any open holes in an enclosure of wiring or electrical components during kit installation.
- To prevent wiring damage or abrasion, do not expose wiring to edges of sheet metal or other sharp objects.
- The inside of the ceiling must be waterproof.

ASSEMBLY AND INSTALLATION

1. Cut a diameter ø205~210mm hole in the ceiling. (Fig.1)
2. Use the toggle switch to select your desired lamp color temperature, 2700K/3000K/3500K /4000K/5000K. (Fig.2)
3. Open knock-off hole. (Fig.3)
4. Put wire clip into knock-off hole. (Fig.4)
5. Open connection box by pulling up the cover, remove one of the half-inch knockouts on the side plate (Fig.5)
6. Insert the white supply wire (neutral) into quick wire connector with the preassembled white fixture wire. Insert the black supply wire (hot) into quick wire connector with the preassembled black fixture wire. Insert supply ground wire into quick wire connector with the preassembled ground wire. Make sure all connections are secure, tuck all wires inside the junction box. (Fig.5)
7. Insert the violet wire into quick wire connector to control light and shade. Insert the gray wire into quick wire connector to control light and shade. Make sure all connections are secure, tuck all wires inside the junction box. Dimmer Commercial Use Only. (Fig.6)
8. Push junction box into the ceiling opening and fix with screw. Close the cover of the connection box. (Fig.7)
9. Connect the low voltage cable to the fixture - the arrows on the male and female parts of the connector between the driver and the fixture should match. (Fig.8)
10. Squeeze both TORSION SPRINGS arms together and insert into the ceiling opening. (Fig.9)
11. Final result. (Fig.10)

ALL RIGHTS RESERVED © ELCO lighting 2020

ELCO Lighting

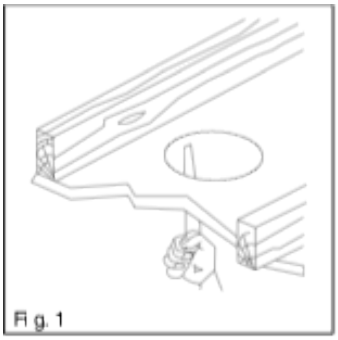
Fig. 1

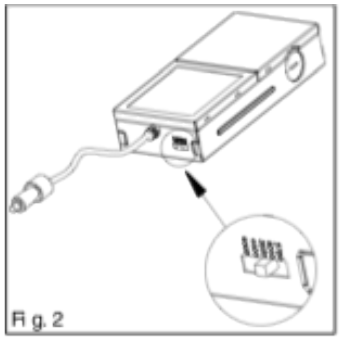
Fig. 2

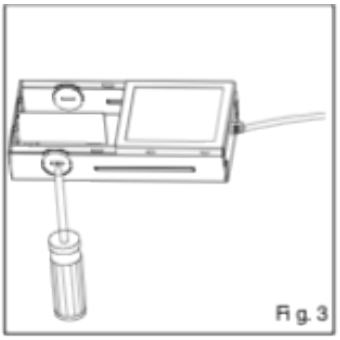
Fig. 3

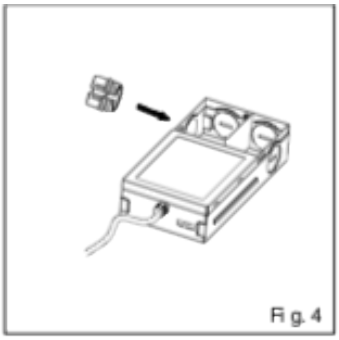
Fig. 4

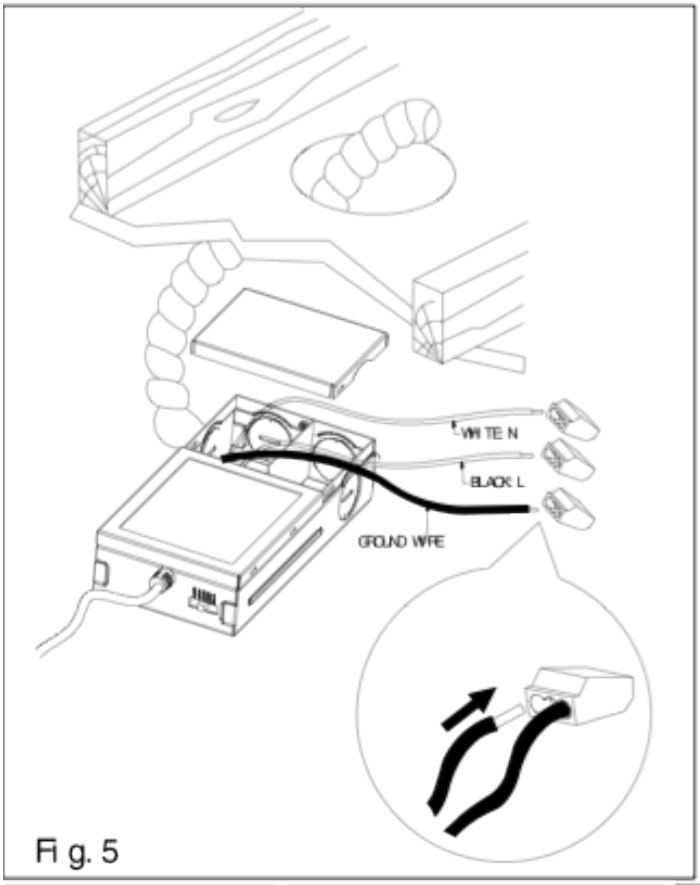

Fig. 5

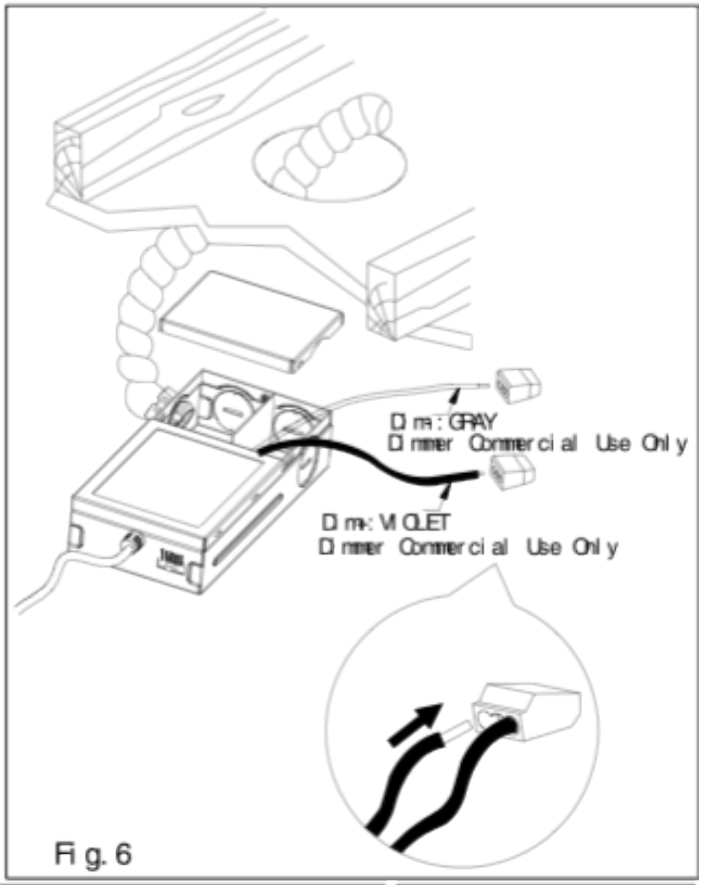

Fig. 6

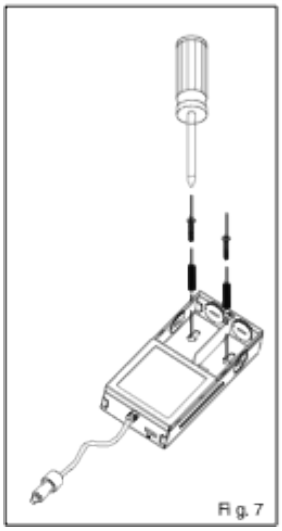
Fig. 7

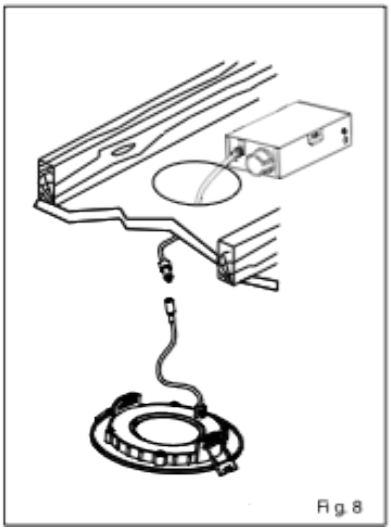
Fig. 8

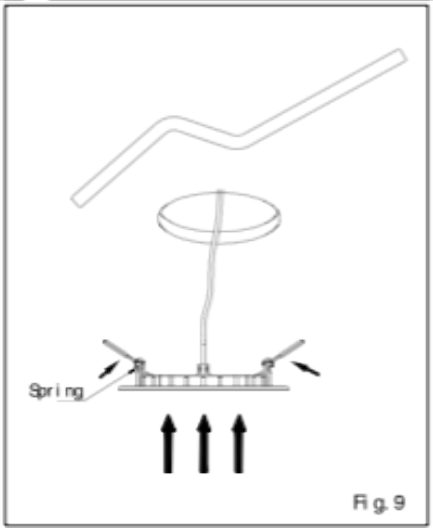

Fig. 9

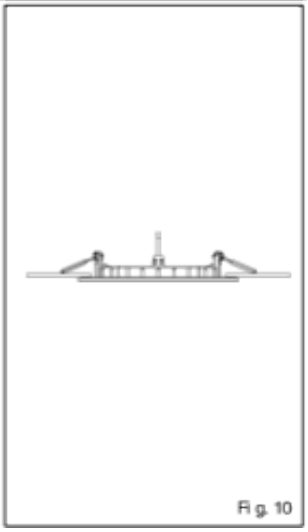
Fig. 10

ALL RIGHTS RESERVED © ELCO lighting 2020