ELCO Lighting

Project name:

Fixture type:

Date:

# LED Wall Mount with Photocell

The LED wall mount fixture is designed for safety and security in residential, stairway, storage, and perimeter lighting applications. Features a photocell and a powerful LED array for maximum energy efficiency. For applications requiring 1600 to 2700 lumens.

## Features

- Die-cast Aluminum Housing.
- Durable dark bronze coat finish.
- Built in photocell.
- For mounting over electrical box or directly to the wall (surface conduit supply).
- Standard input wattage: 17W (120W incandescent equivalent) or 25W (50W HID equivalent).

## Specifications

| | |
|---|---|
| **Wattage** | 17W - 25W |
| **Lumens** | 1900 lm - 2700 lm |
| **Voltage** | 120/277V |
| **Color Temp.** | 3000K - 4000K |
| **Lamp Type** | LED |
| **CRI** | 80+ |
| **Power Factor** | > 0.9 |
| **Wet Location** | Listed |

## Dimensions

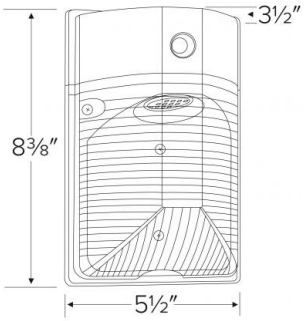


## Technical Details

**Lamp:** Array LED, CRI 80+

**Optics:** Shatterproof polycarbonate

**Construction:** Die-cast aluminum housing. Impact, corrosion, and UV resistant.

**Installation:** 3/4" side and back knockouts for surface conduit supply. Mounts over a junction box or directly to a wall.

**Electrical:** Constant current 120V or 120/277V AC Class 2 Driver with a power factor > 0.9. Ambient operating temperature: -40°F (-40ºC) to 113°F (45°C). Standard input wattage: 17W (120W incandescent equivalent) or 25W (50W HID equivalent).

**Listings:** cUL listed for wet location. DLC listed. LM-80 certified. IP65 rated.

**Warranty:** ELCO Lighting warrants products will be free from defects in materials and workmanship for a period of 5 years.

## Product Numbers

| Item | Lamp type | Lumens | CCT | Watts | Voltage | Finish |
|---|---|---|---|---|---|---|
| **EWM17W30** | LED | 1900 lm | 3000K | 17W | 120/277V | Dark Bronze |
| **EWM17W40** | LED | 2000 lm | 4000K | 17W | 120/277V | Dark Bronze |
| **EWM25W30** | LED | 2600 lm | 3000K | 25W | 120/277V | Dark Bronze |
| **EWM25W40** | LED | 2700 lm | 4000K | 25W | 120/277V | Dark Bronze |

## Product Number Builder

Example: **EWM17W30**

| Wall Mount | Wattage | Color Temp. |
|---|---|---|
| **EWM** | | |
| | **17W** 17 Watt | **30** 3000K |
| | **25W** 25 Watt | **40** 4000K |

2042 E. Vernon Ave., Vernon, CA 90058 • Tel (323) 231-2600 Fax (323) 231-3200 • elcolighting.com
© ELCO Lighting 2024. All rights reserved • Rev. 22 Mar 2024 • ELCO Lighting reserves the right to make specification and design changes without notice.

## LED Wall Mount with Photocell

Multiplier: 3000K (x 0.96)

### PHOTOMETRIC REPORT

Product #: EWM17W40
Wattage/Lumens: 17.1W/ 1642 Lm
Luminaire LPW: 96 Lm/W

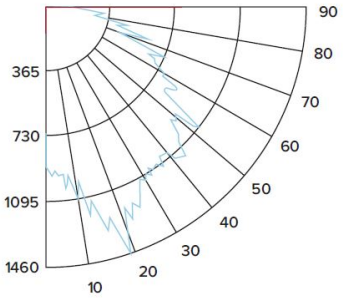


### CANDLE POWER SUMMARY

| Degrees Vertical | 0° |
|---|---|
| 0 | 691 |
| 5 | 879 |
| 15 | 813 |
| 25 | 624 |
| 35 | 554 |
| 45 | 514 |
| 55 | 322 |
| 65 | 90 |
| 75 | 15 |
| 85 | 8 |
| 90 | 5 |

### ILLUMINANCE AT A DISTANCE

| Distance to Target Plane | Footcandles Beam Center | Beam Diameter |
|---|---|---|
| 4' | 43.2 | 4.2' |
| 6' | 19.2 | 6.3' |
| 8' | 10.8 | 8.4' |
| 10' | 6.91 | 10.6' |

### ZONAL LUMEN SUMMARY

| Zone | Lumens | % Luminaire |
|---|---|---|
| 0-30° | 439.51 | 26.80 |
| 0-40° | 711.18 | 43.30 |
| 0-60° | 1273.7 | 77.60 |
| 0-90° | 1598.81 | 97.40 |

## LED Wall Mount with Photocell

Multiplier: 4000K (x 1.04)

### PHOTOMETRIC REPORT

Product #: EWM25W30
Wattage/Lumens: 25.1W/ 2035 Lm
Luminaire LPW: 81 Lm/W

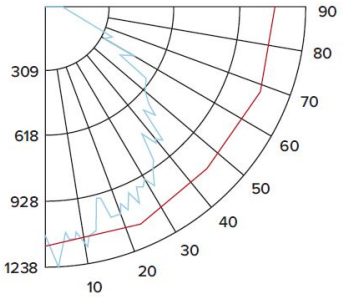


### CANDLE POWER SUMMARY

| Degrees Vertical | 0° |
|---|---|
| 0 | 1080 |
| 5 | 1048 |
| 15 | 907 |
| 25 | 735 |
| 35 | 758 |
| 45 | 645 |
| 55 | 453 |
| 65 | 252 |
| 75 | 50 |
| 85 | 11 |
| 90 | 9 |

### ILLUMINANCE AT A DISTANCE

| Distance to Target Plane | Footcandles Beam Center | Beam Diameter |
|---|---|---|
| 4' | 67.5 | 8.0' |
| 6' | 30.0 | 12.1' |
| 8' | 16.9 | 16.1' |
| 10' | 10.8 | 20.1' |

### ZONAL LUMEN SUMMARY

| Zone | Lumens | % Luminaire |
|---|---|---|
| 0-30° | 714.43 | 35.10 |
| 0-40° | 1105.54 | 54.30 |
| 0-60° | 1758.7 | 86.40 |
| 0-90° | 1989.38 | 97.70 |


© ELCO Lighting 2024. All rights reserved • Rev. 22 Mar 2024 • ELCO Lighting reserves the right to make specification and design changes without notice.