ELCO Lighting

Project name:

Fixture type:

Date:

4" New Construction Architectural Frame with Driver

Features

- Optional 90 minutes, 120/277 VAC, 60Hz Emergency Backup.
- USA designed and assembled.
- LED Light Engine and Hanger bars sold separately (see Compatible Products).
- 2 at the end of the item number denotes Generation 2. Please note Gen 2 and Gen 1 are not cross compatible.

Specifications

Lumens	850 lm - 3000 lm
Voltage	120/277V or 120V
Dimmable	Triac/ELV/0-10V, Sunset, Lutron
Power Factor	≥0.9
Damp Location	Listed

Options

Optional EM Battery Back-up

Technical Details

Construction:

Constructed from 16 gauge galvanized steel for large architectural applications. Housing adjusts in frame to accommodate up to 2” ceiling thickness.

Installation:

Designed for architectural buildings. Easily installed with hanger bars (ordered separately for specific application type). Light engine installed into frame.

Junction Box: Positioned to accommodate straight conduit runs. Seven 1/2” trade size conduit knockouts and four pry-out knockout slots for easy romex installation.

Hanger Bars: Hanger bars ordered separately as FB27: Set of two 27” hanger bars for wood construction or CH26: Set of two 26” C-Channel hanger bars for T-Bar Ceiling.

Electrical:

- Driver is rated for 120V and 277V input (120/277V).
- High Efficiency driver with a power factor > 0.9.
- Can be specified with Lutron drivers for specific applications.

Dimmability:

- 3 in 1 dimming: Triac, ELV and 0-10V dimming in one driver.
- 0-10V dimming down to 5% with compatible dimmer.
- Flicker-Free Dimming.
- Can be specified with Lutron drivers for 0.1% and 1% dimming.
- For full list of dimmers refer to the Dimmer Compatibility List.

Listings: cULus Listed for Damp Location. cULus Listed for Wet Location with select trims. cULus Listed for Direct Contact with Insulation and Combustible Material for units up to 1600 lm. cULus Listed for Feed Through.

Warranty: ELCO Products are built to last. 5-year Limited warranty.

Dimensions

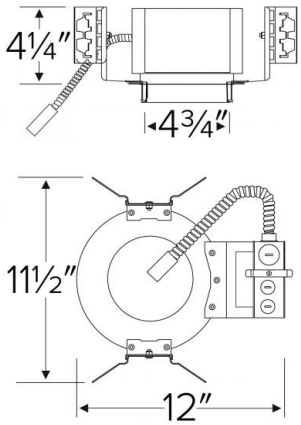

Product Numbers

Item	Lumens	Voltage	Dimming
E4LHU08D2	850 lm	120/277V	Triac/ELV/0-10V
E4LHU08S	850 lm	120/277V	Sunset
E4LHU08L2	850 lm	120V	Lutron
E4LHU12D2	1250 lm	120/277V	Triac/ELV/0-10V
E4LHU12S	1250 lm	120/277V	Sunset

2042 E. Vernon Ave., Vernon, CA 90058 • Tel (323) 231-2600 Fax (323) 231-3200 • elcolighting.com
© ELCO Lighting 2024. All rights reserved • Rev. 09 Oct 2023 • ELCO Lighting reserves the right to make specification and design changes without notice.

Item	Lumens	Voltage	Dimming
E4LHU12L2	1250 lm	120V	Lutron
E4LHU16D2	1600 lm	120/277V	Triac/ELV/0-10V
E4LHU16S	1600 lm	120/277V	Sunset
E4LHU16L2	1600 lm	120V	Lutron
E4LHU20D2	2000 lm	120/277V	Triac/ELV/0-10V
E4LHU20S	2000 lm	120/277V	Sunset
E4LHU20L2	2000 lm	120V	Lutron
E4LHU30D2	3000 lm	120/277V	Triac/ELV/0-10V
E4LHU30S	3000 lm	120/277V	Sunset
E4LHU30L2	3000 lm	120V	Lutron

Product Number Builder

Example: **E4LHU08D2**

ELCO Laurel 4" Architectural Frame	Voltage	Lumens	Dimming	Generation	Optional
E4LH	**U** 120/277V	**08** 850 lm	**D** Triac/ELV/0-10V	**2** Gen 2	No EM
		12 1250 lm	**S** Sunset	Gen 1	**EM1** 8W Emer. Backup
		16 1600 lm	**L** Lutron		**EM2** 12W Emer. Backup
		20 2000 lm			
		30 3000 lm			

© ELCO Lighting 2024. All rights reserved • Rev. 09 Oct 2023 • ELCO Lighting reserves the right to make specification and design changes without notice.

Compatible Products

For use with **4″ Laurel™ LED Frames**

4″ Laurel™ Commercial LED Light Engines

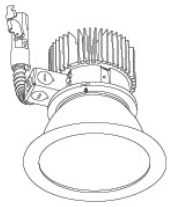

Round Reflector Trim
E410L

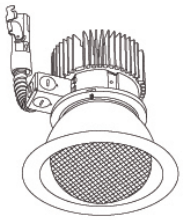

Round Wall Wash Trim
E411L

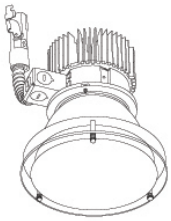

Drop Glass Reflector Trim
E412L

PRODUCT NUMBER BUILDER

Laurel™ Trim		Lumen		Color Temperature		Finish		Generation	
E410L	Reflector	**08**	850 lm (12.5W MAX.)	**27**	2700K	**H**	All Haze	**(blank)**	Gen 1
E411L	Wall Wash	**12**	1250 lm (16.8W MAX.)	**30**	3000K	**W**	All White	**2**	Gen 2
E412L	Drop Glass	**16**	1600 lm (21W MAX.)	**35**	3500K	**B**	All Black		
		20	2000lm (29.4W MAX.)	**40**	4000K	**C**	All Chrome		
		30	3000lm (44.1W MAX.)	**SD**	Sunset Dimming	**HW**	Haze w/White Ring		

2042 E. Vernon Ave., Vernon, CA 90058 • Tel (323) 231-2600 Fax (323) 231-3200 • elcolighting.com
© ELCO Lighting 2024. All rights reserved • Rev. 09 Oct 2023 • ELCO Lighting reserves the right to make specification and design changes without notice.

Dimmer Compatibility Chart

120/277V - 0-10V/Triac/ELV Dimmers

For 4″ Laurel™ System Architectural Frames

E4LHU08D2, E4LHU12D2, E4LHU16D2, E4LHU20D2, E4LHU30D2, E4LFU08D2, E4LFU12D2, E4LFU16D2, E4LFU20D2, E4LFU30D2, E4LRU08D2, E4LRU12D2, E4LRU16D2, E4LRU20D2, E4LRU30D2, E4LTU08D2, E4LTU12D2, E4LTU16D2, E4LTU20D2, E4LTU30D2

For Reference Only

Testing conducted by ELCO Lighting is not a substitute for and does not imply certification by an independent laboratory or any other standards certification. Refer to manufacturer specifications for more detailed information on product certifications and standards. Consult the dimmer manufacturer prior to installation to ensure compatibility.

Manufacturer	Product	Part Number	Dimmed Light Output Range
Triac/ELV Type Dimmers - 120V Only			
Lutron	120V AC 60Hz, 600W LED/CFL/Incandescent/Halogen, Single Pole, 3-Way	S-603PG	5% - 76%
	120V AC 60Hz, 600W LED/CFL/Incandescent/Halogen, Single Pole, 3-Way,	DVCL-153P	5% - 97%
	120V 60Hz, 150W LED/CFL or 600W Incandescent/Halogen, Single Pole, 3-Way	TGCL-153P	5% - 97%
	120V AC 60Hz, 300W Electronic Low Voltage, 3-Way, Commercial/Residential Application	DVELV303P	5% - 97%
	120V, 600W Incandescent/Halogen, Single Pole, Residential Indoor Application	TG-600P	5% - 100%
	120V, 1000W Incandescent or 600W Magnetic Low Voltage, Single Pole, 3-Way	CT103P	5% - 96%
	120V AC 60Hz, 600W Electronic Low Voltage, Single Pole/Multi-Location,	MAELV600	5% - 99%
	120V AC 60Hz, 500W Electronic Low Voltage, Single Pole/Multi-Location,	FAELV500	5% - 99%
	120V, 150W LED/CFL or 600W Incandescent/Halogen, Single Pole, 3-Way	LGCL-153PLH	5% - 100%
	120V AC 60Hz, 150W LED/CFL or 600W Incandescent/Halogen, Single Pole, 3-Way,	SCL-153P	5% - 98%
	120V AC 60Hz, 150W LED/CFL or 600W Incandescent/Halogen, Single Pole, 3-Way,	MACL-153M	5% - 90%
Leviton	120V AC 60Hz, 300W Electronic Low Voltage, 400 Volt Amp, Single Pole, 3-Way,	IPE04	5% - 100%
	120V AC 60Hz, 300W CFL or 600W Incandescent, 400 Volt Amp, Single Pole, 3-Way,	6673-10W	5% - 94%
	120V AC, 600W Incandescent with LED Locator, Single Pole, 3-Way	VP106	5% - 99%
	120V AC 60Hz, 500W Incandescent with LED Level Indicator, Single Pole, 3-Way	6161	5% - 100%
	120/277V AC 60Hz, 1200/1600W LED/CFL, Single Pole, 3-Way, Commercial Application	SF10P	5% - 94%
	120V AC 50/60Hz, 150W LED/CFL or 600W Incandescent/MLV/Halogen, Single Pole, 3-Way	RRD-6CL-WH	5% - 100%
	120V AC, 300W LED/CFL or 600W Incandescent/MLV/Halogen, Single Pole, 3-Way,	TAL06P1-C1	5% - 100%
Cooper	120V AC 60Hz, 300W LED/CFL or 600W Incandescent/Halogen, Single Pole, 3-Way	SLC03P / DAL06P	5% - 99%
	120V AC 60Hz, 300W LED/CFL or 600W Incandescent/Halogen, Single Pole, 3-Way,	D1C03P	5% - 100%
	120V AC 60Hz, 600W Incandescent/Halogen, Single Pole, 3-Way,	RI061-VW-K2	5% - 100%
	120V AC 60Hz, 300W LED/CFL/ Incandescent/Halogen, Single Pole, 3-Way	AAL06A-C2	5% - 97%
	120V AC 60Hz, 150W LED/CFL or 600W Incandescent/Halogen, Single Pole, 3-Way,	6674	5% - 100%
Lightolier	120V, 260W Incandescent/Halogen, Single Pole, 3-Way,	ZP260QEW	5% - 98%

0-10V Type Dimmers - 120/277V			
Lutron	120/277V AC, 0-10V LED/CFL Ballast, Single Pole, 3-Way	Nova NFTV	1% - 100%
Leviton	120/277V AC 50/60Hz, 0-10V LED/CFL Ballast, Single Pole, 3-Way, Indoor Application	Diva DVTV	1% - 100%
	120/277V AC 60Hz, 0-10V LED/CFL Ballast, Single Pole, 3-Way	IP710-DL	1% - 100%

*NOTE: Refer to dimmer manufacturer's documentation for installation instructions and circuit details

Disclaimer: Minimum and maximum loads for LEDs and CFLs are given in number of lamps and may vary depending on the lamp being used. Testing conducted by ELCO Lighting is not a substitute for and does not imply certification by an independent laboratory or any other standards certification. Refer to manufacturer specifications for more detailed information on product certifications and standards.

Integrating our lighting with your Smart Home System is a breeze. Simply check your Smart Home system for compatible smart switches and cross refrence that with our Dimming Compatibility Chart. Once the switches are integrated with your Smart Home system your lights will be ready to go.

amazon alexa | Google Assistant | Apple HomeKit | INSTEON | LUTRON | wemo

2042 E. Vernon Ave. Vernon CA 90058 Tel 323.231.2600 Fax 323.231.3200 elcolighting.com

© ELCO Lighting 2024. All rights reserved • Rev. 09 Oct 2023 • ELCO Lighting reserves the right to make specification and design changes without notice.