ELCO Lighting

Project Name:

Fixture Type:

Date:

WIRE COVER — 1 OR 2 CIRCUIT TRACK

Track Accessories · 2 finishes



FEATURES

- Wire Cover for 1 or 2 Circuit Track.
- Power feed-through with Pendant Assembly.
- One per run.

DIMENSIONS

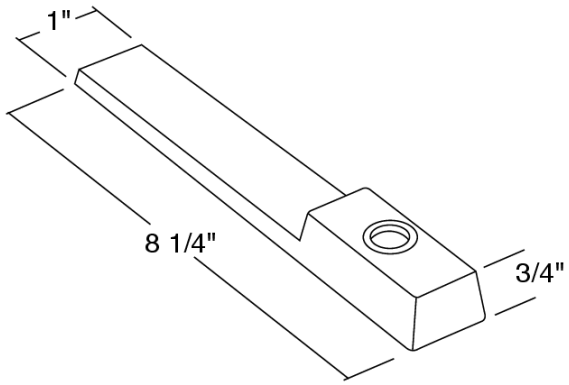

Wire Cover — 1 or 2 Circuit Track

ITEM NUMBERS

ITEM NUMBER	FINISH
EP807W	White
EP807B	Black

FINISHES



White



Black

Item page
elcolighting.com/items/wire-cover-1-or-2-circuit-track
Every item number, IES files, downloads and the latest revision.

PART OF THESE FAMILIES

Single Circuit Track · Two Circuit Track · General Track Accessories

© ELCO Lighting 2026. All rights reserved • Rev. 26 Sep 2026 • ELCO Lighting reserves the right to make specification and design changes without notice.