ELCO Lighting

Project Name:

Fixture Type:

Date:

WEATHER PROOF CLEAR SHIELD FOR EMERGENCY LIGHTS



Accessory

ITEM NUMBER **EEPS65**

FEATURES

•Polycarbonate weatherproof clear shield for emergency heads.
•UL listed for wet locations

DIMENSIONS

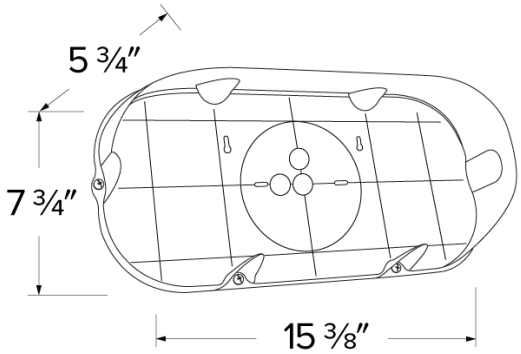

Item page
elcolighting.com/items/weather-proof-clear-shield-emergency-lights
Every item number, IES files, downloads and the latest revision.

PART OF THESE FAMILIES

Emergency Lights

© ELCO Lighting 2026. All rights reserved • Rev. 13 Oct 2026 • ELCO Lighting reserves the right to make specification and design changes without notice.