ELCO Lighting

Project Name:

Fixture Type:

Date:

# UNIVERSAL DIMMABLE LED DRIVER (SMALL)

**Power Supply**



## FEATURES

- Small universal dimmable LED drivers
- Suitable for damp locations
- Triac/ELV/MLV dimmable
- 120/277V
- ETL listed
- Class II, short circuit and overload protection

## DIMENSIONS

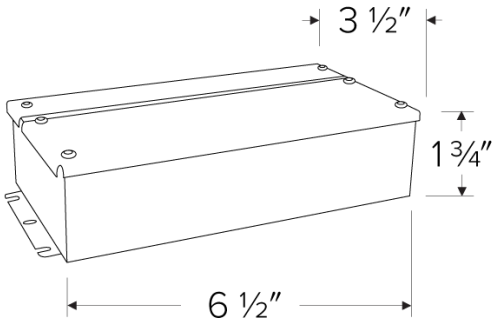


## SPECIFICATIONS

| | |
|---|---|
| Wattage | 24 · 60 W |
| Voltage | 12V DC (2A) · 12V DC (5A) · 24V DC (1A) · 24V DC (2.5A) |
| Dimming | Triac/ELV/MLV |

## ITEM NUMBERS

| ITEM NUMBER | WATTS | VOLTAGE | DIMMING |
|---|---|---|---|
| **DRVU24V24WD** | 24W | 24V DC (1A) | Triac/ELV/MLV |
| **DRVU24V60WD** | 60W | 24V DC (2.5A) | Triac/ELV/MLV |

**Item page**
elcolighting.com/items/universal-dimmable-led-driver-small
Every item number, IES files, downloads and the latest revision.

## PART OF THESE FAMILIES

2″ 24V DC Koto™ · 6″ 24V DC Koto™ · 3″ 24V DC Koto™ · 4″ 24V DC Koto™ · Tape Light Power Supply · Transformers · Koto™ Landscape Bullet · Koto™ Landscape In-Ground

⬇ Dimmer compatibility list

elcolighting.com · DRVU Universal LED Divers Dimmer List


© ELCO Lighting 2026. All rights reserved • Rev. 13 Nov 2026 • ELCO Lighting reserves the right to make specification and design changes without notice.