ELCO Lighting

Project Name:

Fixture Type:

Date:

"T" CONNECTOR TRACK ACCESSORY

Track Connectors · 2 finishes

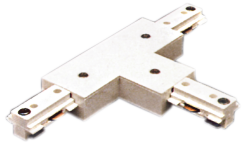

FEATURES

•Power feedable connector to joing three track sections.

DIMENSIONS

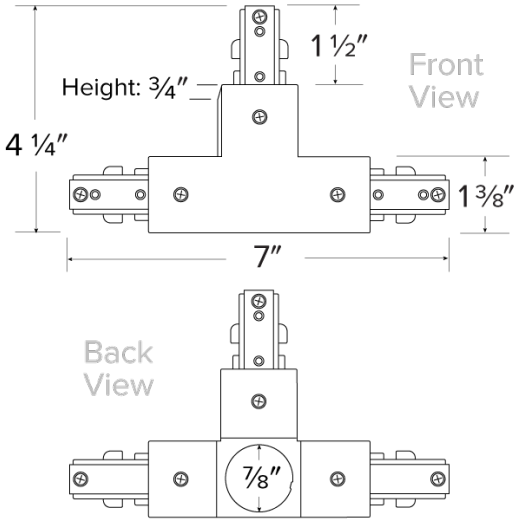

ITEM NUMBERS

ITEM NUMBER	FINISH
EC805W	White
EC805B	Black

FINISHES

White ● Black

Item page
elcolighting.com/items/t-connector-track-accessory-0
Every item number, IES files, downloads and the latest revision.

PART OF THESE FAMILIES

Two Circuit Track

© ELCO Lighting 2026. All rights reserved • Rev. 16 Oct 2026 • ELCO Lighting reserves the right to make specification and design changes without notice.