ELCO Lighting

Project Name:

Fixture Type:

Date:

STRAIGHT CONNECTOR TRACK ACCESSORY

Track Connectors · 2 finishes



FEATURES

- Straight Connector for 2 Circuit Track.
- Power feedable connector to join two track sections.

DIMENSIONS

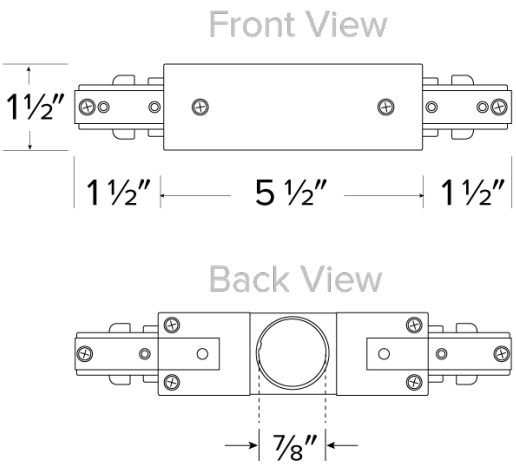

SPECIFICATIONS

Accessory option	Straight Connector

ITEM NUMBERS

ITEM NUMBER	FINISH	ACCESSORY OPTION
EC803B	Black	Straight Connector
EC803W	White	Straight Connector

FINISHES


Black


White

Item page
elcolighting.com/items/straight-connector-track-accessory-0
Every item number, IES files, downloads and the latest revision.

PART OF THESE FAMILIES

Two Circuit Track

© ELCO Lighting 2026. All rights reserved • Rev. 16 Oct 2026 • ELCO Lighting reserves the right to make specification and design changes without notice.