ELCO Lighting

Project Name:

Fixture Type:

Date:

POPLAR™ LED MODULE WITH 5-CCT AND 3-LUMEN SWITCH

Module



DIMENSIONS

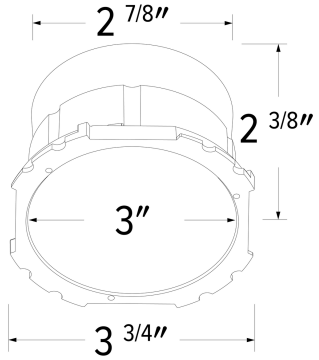

Poplar™ LED Module with 5-CCT and 3-Lumen Switch

SPECIFICATIONS

Lumens	850 / 1100 / 1250 lm
Voltage	120-277V
Color temp.	2700K-5000K
Dimming	0-10V/Triac/ELV
Beam angle	90°+ Ambient

ITEM NUMBERS

ITEM NUMBER	LUMENS	VOLTAGE	DIMMING	CCT	BEAM ANGLE
ELP11CT5DX	850 / 1100 / 1250 lm	120-277V	0-10V/Triac/ELV	2700K-5000K	90°+ Ambient

Item page
elcolighting.com/items/standard-poplar-led-module
Every item number, IES files, downloads and the latest revision.

PART OF THESE FAMILIES

4″ Poplar™ · 6″ Poplar™

© ELCO Lighting 2026. All rights reserved • Rev. 09 Oct 2026 • ELCO Lighting reserves the right to make specification and design changes without notice.