ELCO Lighting

Project Name:

Fixture Type:

Date:

STANDARD KOTO™ 4″ SLEEK WALL WASH REFLECTOR

Trim · 2 finishes



DIMENSIONS

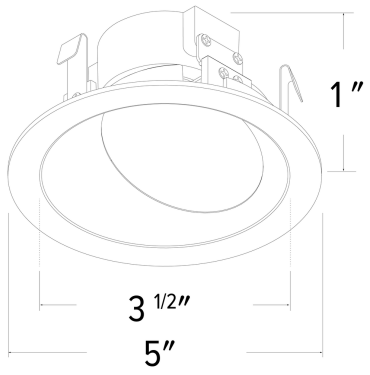

Standard Koto™ 4″ Sleek Wall Wash Reflector

ITEM NUMBERS

ITEM NUMBER	FINISH
ELK4183W	White
ELK4183BB	Black

FINISHES

White	Black
	●

Item page
elcolighting.com/items/standard-koto-4-sleek-wall-wash-reflector
Every item number, IES files, downloads and the latest revision.

PART OF THESE FAMILIES

4″ Architectural Koto™ · 4″ Standard Koto™ · 4″ Tunable White Koto™

© ELCO Lighting 2026. All rights reserved • Rev. 19 Oct 2026 • ELCO Lighting reserves the right to make specification and design changes without notice.