ELCO Lighting

Project Name:

Fixture Type:

Date:

SQUARE CORNER MOUNT ALUMINUM CHANNEL

Channel

The Ambio™ EUD34 is a high-quality aluminum channel designed to add an architectural element to LED strips while protecting them from dust and dirt. Manufactured with a frosted diffuser that can be slid or popped on.

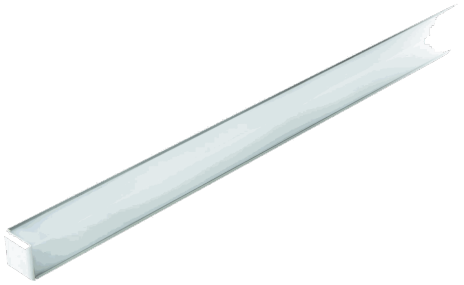

FEATURES

- Polycarbonate diffuser
- Silver aluminum finish
- Fits tape lights up to 9mm (3/8″) max
- Includes frosted lens, 2 end caps, 4 mounting clips
- Aluminum channel is approximately 7′8″ long

DIMENSIONS

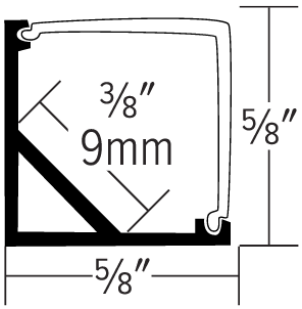

SPECIFICATIONS

Accessory option	Channel
Length	7' 8" · Custom Cut
Dimensions	5/8" W x 5/8" H

FINISHES

Aluminum

Item page
elcolighting.com/items/square-corner-mount-aluminum-channel
Every item number, IES files, downloads and the latest revision.

PART OF THESE FAMILIES

Aluminum Channels · Damp LED Tape Light · COB Indoor LED Tape Light · Indoor LED Tape Light

PRODUCT NUMBER BUILDER

Specify **Square Corner Mount Aluminum Channel** item number (Select one) Example: **EUD34-8** Your item number:

ITEM	LENGTH
EUD34	**8** 7' 8" Custom Cut

TECHNICAL DETAILS

Construction: Aluminum channels. Can hold tape up to 9mm (3/8″) wide.

Optics: Included frosted lens reduces LED dotting and protects the LED strip. Lens can be popped on or slid onto the profile.

Installation: Can be mounted into corners. LED tape is placed into channel using 3M tape backing on LED tape light. Lens can be either popped or slid onto channel.

Compatible Tape: E15-24, E30-24 and EF26-24

© ELCO Lighting 2026. All rights reserved • Rev. 01 Nov 2026 • ELCO Lighting reserves the right to make specification and design changes without notice.