ELCO Lighting

Project Name:

Fixture Type:

Date:

SMALL WIRE GUARD

Accessory

ITEM NUMBER **EEWG11**

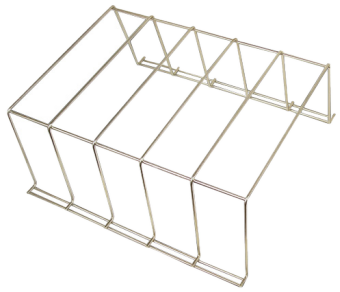

FEATURES

• Small wire guard, 15″ W x 13 1/2″ H x 6″ D

DIMENSIONS

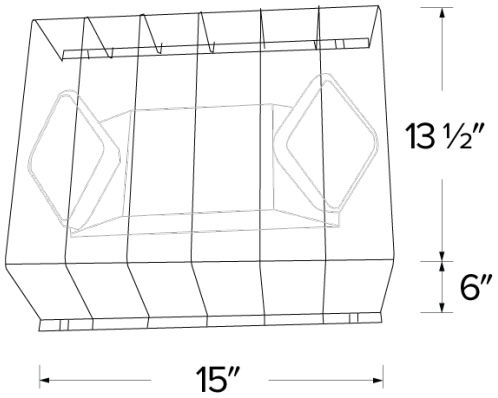

SPECIFICATIONS

Accessory option Wire Guard

Item page
elcolighting.com/items/small-wire-guard
Every item number, IES files, downloads and the latest revision.

PART OF THESE FAMILIES

Emergency Lights

© ELCO Lighting 2026. All rights reserved • Rev. 13 Oct 2026 • ELCO Lighting reserves the right to make specification and design changes without notice.