ELCO Lighting

Project Name:

Fixture Type:

Date:

SLOPED CEILING STEM ADAPTER — 0° TO 90°, CEILING MOUNT TRACK

Track Accessories · 2 finishes



FEATURES

•Allows use of extension stem on sloped or cathedral ceilings.
•0° - 90° (for ceiling mount track system only).

DIMENSIONS

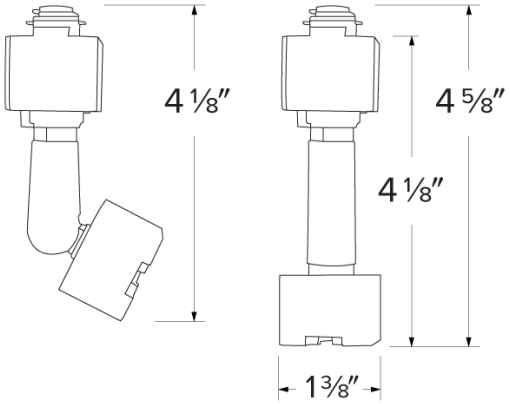

SPECIFICATIONS

Accessory option Adapter

ITEM NUMBERS

ITEM NUMBER	FINISH	ACCESSORY OPTION
EP906B	Black	Adapter
EP906W	White	Adapter

FINISHES

Black


White

Item page
elcolighting.com/items/sloped-ceiling-stem-adapter-0deg-90deg-ceiling-mount-track
Every item number, IES files, downloads and the latest revision.

PART OF THESE FAMILIES

General Track Accessories

© ELCO Lighting 2026. All rights reserved • Rev. 26 Sep 2026 • ELCO Lighting reserves the right to make specification and design changes without notice.