ELCO Lighting

Project Name:

Fixture Type:

Date:

SHALLOW MOUNT ALUMINUM CHANNEL

Channel

The Ambio™ EUD31 is a high-quality aluminum channel designed to add an architectural element to LED strips while protecting them from dust and dirt. Manufactured with a frosted diffuser that can be slid or popped on.



FEATURES

- Polycarbonate diffuser
- Silver aluminum finish
- Fits tape lights up to 12mm (1/2") wide
- Includes frosted lens, 2 end caps, 4 mounting clips
- Aluminum channel is approximately 7'8" long

DIMENSIONS

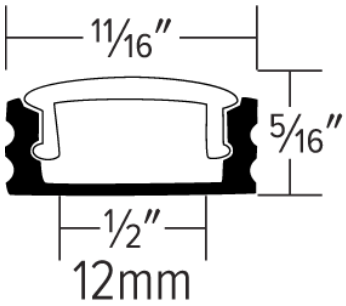

SPECIFICATIONS

Accessory option	Channel
Length	7' 8" · Custom Cut
Dimensions	11/16" W x 5/16" H

FINISHES

Aluminum

Item page
elcolighting.com/items/shallow-mount-aluminum-channel
Every item number, IES files, downloads and the latest revision.

PART OF THESE FAMILIES

Aluminum Channels · Damp LED Tape Light · COB Indoor LED Tape Light · Indoor LED Tape Light

PRODUCT NUMBER BUILDER

Specify **Shallow Mount Aluminum Channel** item number (Select one) Example: **EUD31-8** Your item number:

ITEM	LENGTH
EUD31	**8** 7' 8" Custom Cut

TECHNICAL DETAILS

Construction: Aluminum channels. Can hold tape up to 12mm (1/2") wide.

Optics: Included frosted lens reduces LED dotting and protects the LED strip. Lens can be popped on or slid onto the profile.

Installation: Can be surface mounted to a flat surface. LED tape is placed into channel using 3M tape backing on LED tape light. Lens can be either popped or slid onto channel.

Compatible Tape: E15-24, E22-24, E30-24, E44-24, E44-24M, E45-24, EW44-24, EW45-24, E50-24, E60-24, EF26-24, EWP460 and E460

© ELCO Lighting 2026. All rights reserved • Rev. 01 Nov 2026 • ELCO Lighting reserves the right to make specification and design changes without notice.