ELCO Lighting

Project Name:

Fixture Type:

Date:

SAGE LED UNDERCABINET LIGHTBAR

Bar



FEATURES

- 1"H x 1"W
- End to end connector and mounting brackets included
- Linkable up to 40ft.
- Polycarbonate lens
- 120V Dimmable
- ETL Listed
- JA8-2025-E

DIMENSIONS

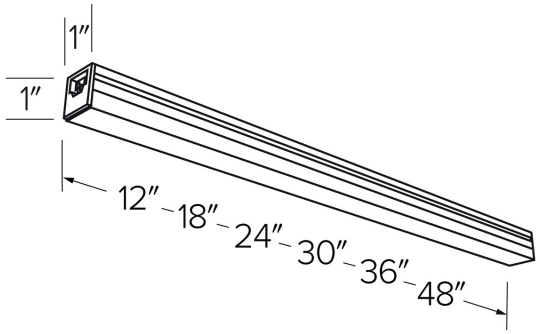

SPECIFICATIONS

Wattage	5 · 8 · 10 · 15 · 20 · 12 W
Lumens	300 · 500 · 600 · 720 · 900 · 1200 lm
Voltage	120V
Color temp.	2700K-5000K · 3000K
CRI	90+

ITEM NUMBERS

ITEM NUMBER	LUMENS	WATTS	VOLTAGE	CCT	FINISH
EUD32CT5W	300 lm	5W	120V	2700K-5000K	White
EUD34CT5W	600 lm	10W	120V	2700K-5000K	White
EUD35CT5W	720 lm	12W	120V	2700K-5000K	White
EUD36CT5W	900 lm	15W	120V	2700K-5000K	White

FINISHES

White

Item page
elcolighting.com/items/sage-led-undercabinet-lightbar
Every item number, IES files, downloads and the latest revision.

PART OF THESE FAMILIES

Undercabinet Bars

↓ Dimmer compatibility list

elcolighting.com · Undercabinet Lightbar Dimmer List

© ELCO Lighting 2026. All rights reserved • Rev. 13 Nov 2026 • ELCO Lighting reserves the right to make specification and design changes without notice.