ELCO Lighting

Project Name:

Fixture Type:

Date:

RECESSED LED EDGE LIT EXIT SIGN

Fixture

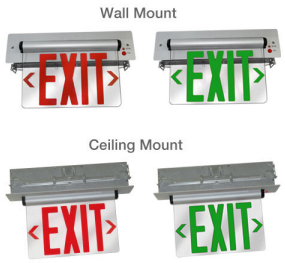

FEATURES

- Single or Double faced.
- 120V/277V with battery backup and hanger bars.
- For wall or ceiling mount.
- UL or ETL listed.
- Removable chevrons (arrows) included for jobsite customization.

DIMENSIONS

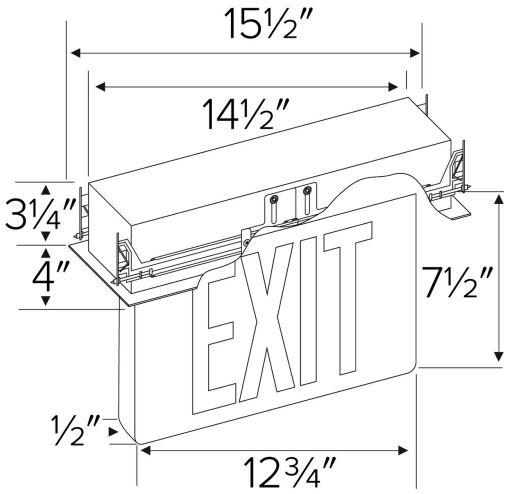

SPECIFICATIONS

Letter color	Red · Green · Red & Green
Face type	Single Face · Double Face

ITEM NUMBERS

ITEM NUMBER	FACE TYPE	LETTER COLOR
EDGREC1RG	Single Face	Red & Green
EDGREC2RG	Double Face	Red & Green
EDGREC2G	Double Face	Green

Item page
elcolighting.com/items/recessed-led-edge-lit-exit-sign
Every item number, IES files, downloads and the latest revision.

PART OF THESE FAMILIES

Exit Signs

© ELCO Lighting 2026. All rights reserved • Rev. 26 Sep 2026 • ELCO Lighting reserves the right to make specification and design changes without notice.