ELCO Lighting

Project Name:

Fixture Type:

Date:

POPLAR™ LED MODULE WITH 5-CCT SWITCH

Module



DIMENSIONS

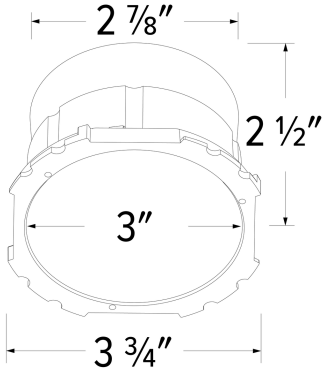

Poplar™ LED Module with 5-CCT Switch

SPECIFICATIONS

Lumens	1250 lm
Voltage	120V
Color temp.	2700K-5000K
Dimming	Triac/ELV
Beam angle	90°+ Ambient

ITEM NUMBERS

ITEM NUMBER	LUMENS	VOLTAGE	DIMMING	CCT	BEAM ANGLE
ELP11CT5	1250 lm	120V	Triac/ELV	2700K-5000K	90°+ Ambient

Item page
elcolighting.com/items/poplar-led-module-5-cct-switch
Every item number, IES files, downloads and the latest revision.

PART OF THESE FAMILIES

4″ Poplar™ · 6″ Poplar™

© ELCO Lighting 2026. All rights reserved • Rev. 09 Oct 2026 • ELCO Lighting reserves the right to make specification and design changes without notice.