ELCO Lighting

Project Name:

Fixture Type:

Date:

PEX™ 4″ ROUND NON-ADJUSTABLE TRIMLESS SMOOTH REFLECTOR TRIM

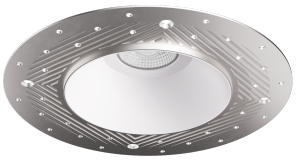

Trim · Round · 4″ · 4 finishes

Pex™ Precision die-cast trims with twist-on system for easy tool-free installation

FEATURES

- 4″ Trimless Smooth Reflector (ELK408)
- 4" Trimless Spackle Frame Ordered Separately (EL4SFR)
- Fixed Downlight (non-adjustable)
- Convenient twist-on design for easy installation.
- Lamp: Koto™ LED Module and Canless Koto™ LED Module
- Wet location rated.

DIMENSIONS

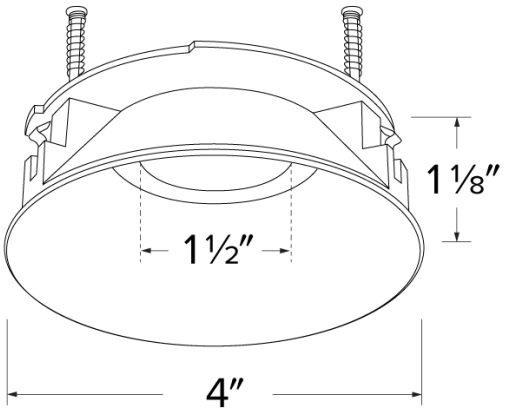

TECHNICAL DETAILS

Installation: Twist-on design allows for easy mounting onto the Canless Koto™ LED Module.

Lamp: Koto™ LED Module and Canless Koto™ LED Module

SPECIFICATIONS

Aperture	4"
Shape	Round
Part type	Trim · Spackle Frame

ITEM NUMBERS

ITEM NUMBER	FINISH	PART TYPE
ELK408W	White	Trim
ELK408H	Haze	Trim
ELK408B	Black	Trim
ELK408BZ	Bronze	Trim

FINISHES

White · Haze · Black · Bronze

Item page
elcolighting.com/items/pex-4-round-non-adjustable-trimless-smooth-reflector-trim
Every item number, IES files, downloads and the latest revision.

PART OF THESE FAMILIES

4″ Standard Koto™ · 4″ Architectural Koto™ · 4″ Canless Koto™ · 4″ DX Koto™ · 4″ Tunable White Koto™ · Koto™ Downsizer Ring · 4″ 24V DC Koto™ · 4″ Koto™ MAX · 4″ Koto™ Aim

© ELCO Lighting 2026. All rights reserved • Rev. 20 Nov 2026 • ELCO Lighting reserves the right to make specification and design changes without notice.