ELCO Lighting

Project Name:

Fixture Type:

Date:

# PEX™ 3″ TRIMLESS REFLECTOR

**Trim · Round · 3 finishes**

Pex™ Precision die-cast trims with twist-on system for easy tool-free installation



## FEATURES

- 3″ Trimless Reflector (ELK308)
- 3″ Trimless Spackle Frame Ordered Separately (EL3SFR)
- 3″ Knife Edge Wood Ceiling Trim Ordered Separately (EL3WCRW, EL3WCRB)
- Convenient twist-on design for easy installation.
- Wet Location Rated.
- Lamp: Koto™ LED Module and Canless Koto™ LED Module

## DIMENSIONS

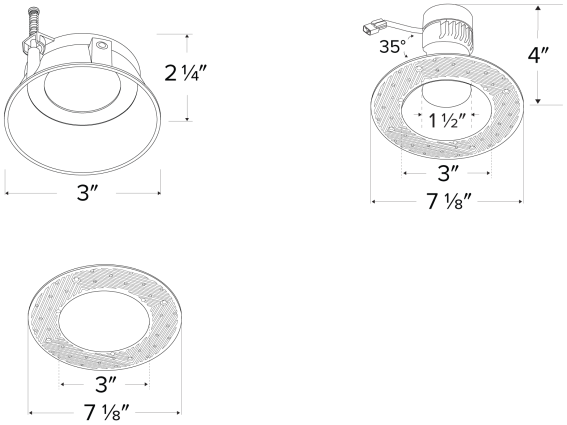


## TECHNICAL DETAILS

**Installation:** Twist-lock design allows for easy mounting onto the Koto™ LED Module.
**Lamp:** Koto™ LED Module and Canless Koto™ LED Module.
**Listings:** Wet Location Rated.

## SPECIFICATIONS

| | |
|---|---|
| Shape | Round |
| Part type | Trim · Spackle Frame |

## ITEM NUMBERS

| ITEM NUMBER | FINISH | PART TYPE |
|---|---|---|
| **ELK308W** | White | Trim |
| **ELK308H** | Haze | Trim |
| **ELK308B** | Black | Trim |
| **EL3SFR** | — | Spackle Frame |

## FINISHES

White · Haze · Black

**Item page**
elcolighting.com/items/pex-3-trimless-reflector
Every item number, IES files, downloads and the latest revision.

## PART OF THESE FAMILIES

3″ Standard Koto™ · 3″ Canless Koto™ · 3″ Architectural Koto™ · 3″ DX Koto™ · 3″ Tunable White Koto™ · Koto™ Downsizer Ring · 3″ 24V DC Koto™ · 3″ Koto™ MAX · 3″ Koto™ Aim


© ELCO Lighting 2026. All rights reserved • Rev. 18 Nov 2026 • ELCO Lighting reserves the right to make specification and design changes without notice.