ELCO Lighting

Project Name:

Fixture Type:

Date:

PEX™ 2″ ROUND SLEEK LENSED WALL WASH REFLECTOR

Trim · 2 finishes



DIMENSIONS

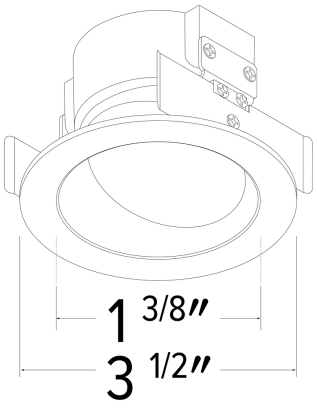

Pex™ 2″ Round Sleek Lensed Wall Wash Reflector

ITEM NUMBERS

ITEM NUMBER	FINISH
ELK2883BB	Black
ELK2883W	White

FINISHES

● Black

White

Item page
elcolighting.com/items/pex-2-round-sleek-lensed-wall-wash-reflector
Every item number, IES files, downloads and the latest revision.

PART OF THESE FAMILIES

2″ Standard Koto™ · 2″ Architectural Koto™ · 2″ Tunable White Koto™ · Koto™ Downsizer Ring

© ELCO Lighting 2026. All rights reserved • Rev. 08 Oct 2026 • ELCO Lighting reserves the right to make specification and design changes without notice.