ELCO Lighting

Project Name:

Fixture Type:

Date:

PEX™ 2″ ADJUSTABLE TRIMLESS REFLECTOR

Trim · Round · 2 finishes

Pex™ Precision die-cast trim with Twist-On system for easy tool-free installation



FEATURES

- 2″ Adjustable Trimless Reflector (ELK215W)
- 2″ Trimless Spackle Frame Ordered Separately (EL2SFR)
- 35° Adjustability.
- Convenient twist-on design for easy installation.
- Damp Location Rated.
- Lamp: Koto™ LED Module.

DIMENSIONS

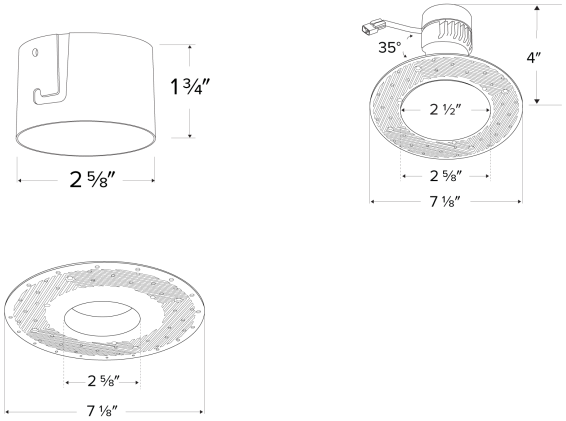

TECHNICAL DETAILS

Installation: Twist-On design allows for easy mounting onto the Koto™ LED Module.

Lamp: Koto™ LED Module.

SPECIFICATIONS

Shape	Round
Part type	Trim · Spackle Frame

FINISHES

White



Black

Item page
elcolighting.com/items/pex-2-adjustable-trimless-reflector
Every item number, IES files, downloads and the latest revision.

PART OF THESE FAMILIES

2″ Canless Koto™ · 2″ Architectural Koto™ · 2″ DX Koto™ · 2″ 24V DC Koto™ · 2″ Tunable White Koto™ · Koto™ Downsizer Ring · 2″ Standard Koto™ · 2″ Koto™ Aim · 3″ Koto™ Aim · 4″ Koto™ Aim

PRODUCT NUMBER BUILDER

Specify **Pex™ 2″ Adjustable Trimless Reflector** item number (Select one) Example: **ELK215W** Your item number:

ITEM	FINISH
EL	**W** White **B** Black

© ELCO Lighting 2026. All rights reserved • Rev. 04 Nov 2026 • ELCO Lighting reserves the right to make specification and design changes without notice.