ELCO Lighting

Project Name:

Fixture Type:

Date:

PAR 30 LINE VOLTAGE YOKE MOUNTED ROUNDBACK CYLINDER TRACK FIXTURE

PAR30



ITEM NUMBER **ET662B**

FEATURES

•For use with 1 or 2 circuit track and accessories.
•Lamp: 120V 75W PAR30.
•This track head comes standard as H Style. J (Juno) and L (Lightolier) styles are available: For J style please order PJTHI (W/B) with the track head. For L style please order PLTHI (W/B) with the track head. Note these must be factory installed.

DIMENSIONS

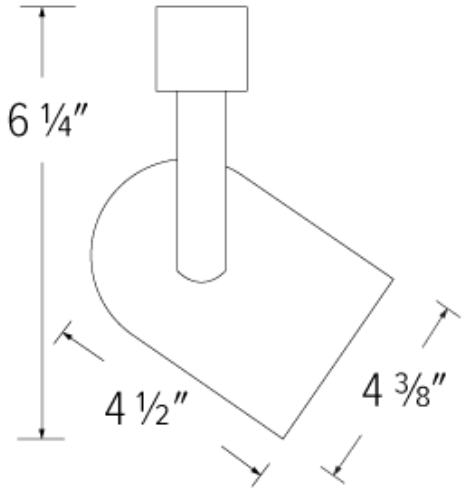

SPECIFICATIONS

Wattage	75W
Voltage	120V
Lamp type	Medium Base (E26)

FINISHES



Black

Item page
elcolighting.com/items/par-30-line-voltage-yoke-mounted-roundback-cylinder-track-fixture
Every item number, IES files, downloads and the latest revision.

PART OF THESE FAMILIES

PAR30 Line Voltage Track Lighting

TECHNICAL DETAILS

Construction: Track fixture with a powder coated finish.

Adjustability: Track head is adjustable 180° vertically with 358° rotation.

Lamp: Compatible with LED and non-LED PAR30 lamp (not included).

Installation: Installs into H-Style track from ELCO or others. Compatible with Single and two circuit track. Can be special ordered as J-Style (requires PJTLI W/B) or L-Style (requires PLTLI W/B).

Socket: High quality Porcelain socket, jacketed aluminum screw shell, medium-base (E26) socket.

Dimmability: Triac and ELV dimmable based on lamp.

Listings:

- ETL Listed
- RoHS Compliant

© ELCO Lighting 2026. All rights reserved • Rev. 13 Oct 2026 • ELCO Lighting reserves the right to make specification and design changes without notice.