ELCO Lighting

Project Name:

Fixture Type:

Date:

OAK™ HOUSINGS WITH 12V AC TRANSFORMER

Housing

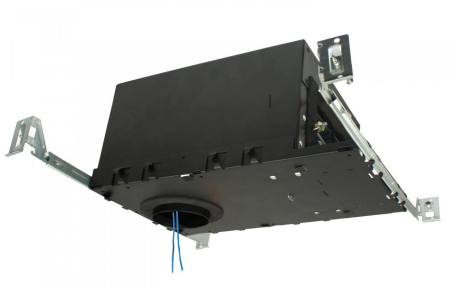

FEATURES

- R60 Insulation housing, IC Airtight
- Includes individual electronic transformer
- 2″ cutout for downlight (E1L02 and E1L12)
- 2 3/8″ cutout for adjustable (E1L22 & E1L32)
- 2 11/16″ cutout for trimless (EL01SFR + E1L61)
- Suitable for Chicago Plenum construction

DIMENSIONS

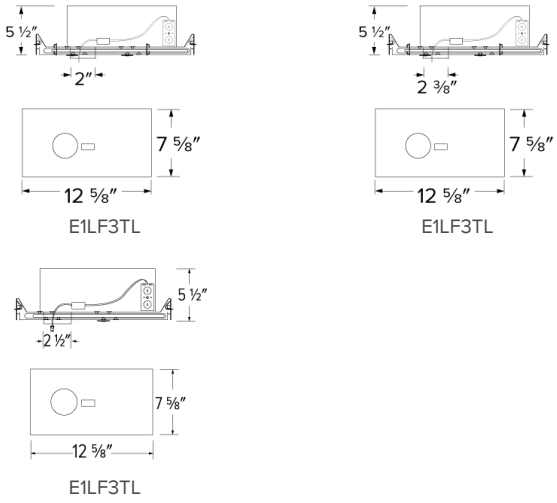

SPECIFICATIONS

Voltage	120V · 277V
Dimming	120V Input/ELV Dimmable · 277V Input · 0-10V · 277V Input/0-10V Dimmable · ELV
Cutout	For Oak Downlight · For Oak Adjustable · For Oak Trimless
Housing type	IC Airtight

Item page
elcolighting.com/items/oak-housings-12v-ac-transformer
Every item number, IES files, downloads and the latest revision.

PART OF THESE FAMILIES

Low Voltage Oak™

PRODUCT NUMBER BUILDER

Specify **Oak™ Housings with 12V AC Transformer** item number (Select one) Example: **E1LF1ICAJ** Your item number:

ITEM	CUTOUT	HOUSING TYPE	DIMMING
E1LF	**1** For Oak Downlight **2** For Oak Adjustable **3TL** For Oak Trimless	**ICAJ** IC Airtight	**-7** 277V Input **DX** 0-10V **DX-7** 277V Input/0-10V Dimmable ELV

© ELCO Lighting 2026. All rights reserved • Rev. 19 Oct 2026 • ELCO Lighting reserves the right to make specification and design changes without notice.