ELCO Lighting

Project Name:

Fixture Type:

Date:

NEW CONSTRUCTION UNIVERSAL FRAME WITH HANGER BARS

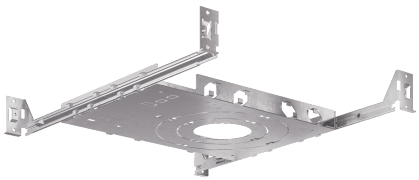

Accessory

New Construction Universal Frame for 2", 4" and 6" Elm™ System Downlights.

ITEM NUMBER **E246LF1**

FEATURES

- New Construction Universal Frame with Captive Hanger Bars for Elm™ System Downlights.
- For use with 2″, 4″ or 6″ Round Downlights.

DIMENSIONS

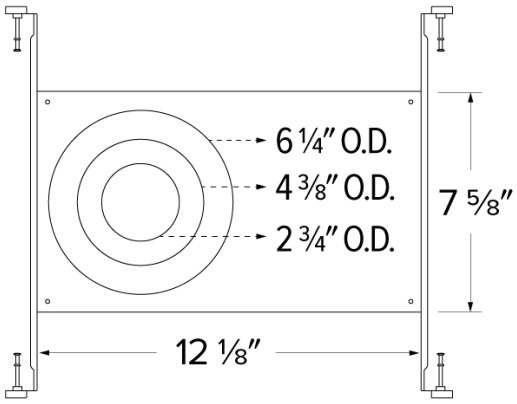

Item page
elcolighting.com/items/new-construction-universal-frame-hanger-bars
Every item number, IES files, downloads and the latest revision.

PART OF THESE FAMILIES

6″ Elm™ · 2″ Elm™ · 4″ Elm™ · 2″ Elm™ Flexa · 4″ Modular Elm™

© ELCO Lighting 2026. All rights reserved • Rev. 16 Oct 2026 • ELCO Lighting reserves the right to make specification and design changes without notice.