ELCO Lighting

Project Name:

Fixture Type:

Date:

NEW CONSTRUCTION MULTIPLE FRAME FOR 2″ RECESSED

Accessory · 2″

Works with TEAK System and 2" Canless Elm System Downlights



FEATURES

- New Construction Multiple Frame for Teak series inserts.
- For row mounting fixtures.
- Requires driver.

DIMENSIONS

E2LF1-M2 8 ¾″
E2LF1-M3 13 ⅛″
E2LF1-M4 17 ½″
E2LF1-M5 21 ⅞″

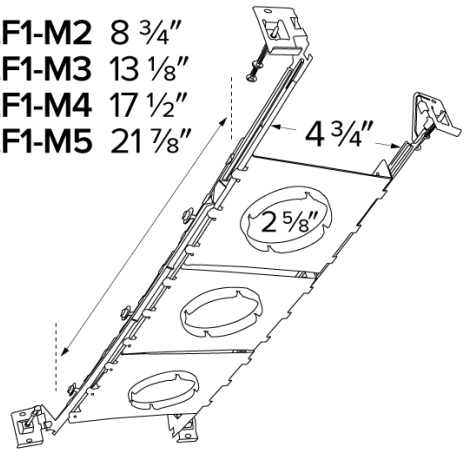

SPECIFICATIONS

Aperture	2"
Length	8 3/4" · 13 1/8" · 17 1/2" · 21 7/8"

ITEM NUMBERS

ITEM NUMBER	LENGTH
E2LF1-M2	8 3/4"
E2LF1-M3	13 1/8"
E2LF1-M4	17 1/2"
E2LF1-M5	21 7/8"

Item page
elcolighting.com/items/new-construction-multiple-frame-2-recessed
Every item number, IES files, downloads and the latest revision.

PART OF THESE FAMILIES

Teak™ · 2″ Elm™ · 2″ Elm™ Flexa · Architectural Oak™ · Low Voltage Oak™

© ELCO Lighting 2026. All rights reserved • Rev. 13 Nov 2026 • ELCO Lighting reserves the right to make specification and design changes without notice.