ELCO Lighting

Project Name:

Fixture Type:

Date:

MINI CONNECTOR TRACK ACCESSORY

Track Connectors · 4 finishes



FEATURES

- Mini Connector for 1 Circuit Track.
- Joins two Track sections.
- Cannot be used as a feed point.

DIMENSIONS

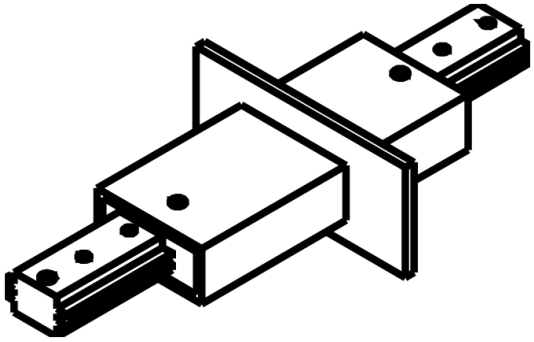

Mini Connector Track Accessory

SPECIFICATIONS

Connector type	Mini Connector
Accessory option	Mini Connector

ITEM NUMBERS

ITEM NUMBER	FINISH	ACCESSORY OPTION	CONNECTOR TYPE
EP808B	Black	Mini Connector	Mini Connector
EP808BZ	Bronze	Mini Connector	Mini Connector
EP808W	White	Mini Connector	Mini Connector

FINISHES



Black



Bronze

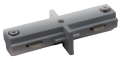

Nickel



White

Item page
elcolighting.com/items/mini-connector-track-accessory
Every item number, IES files, downloads and the latest revision.

PART OF THESE FAMILIES

Single Circuit Track

© ELCO Lighting 2026. All rights reserved • Rev. 26 Sep 2026 • ELCO Lighting reserves the right to make specification and design changes without notice.