ELCO Lighting

Project Name:

Fixture Type:

Date:

MAGNETIC TRANSFORMERS 120V AND 277V TO 12V OR 277V TO 120V

Transformer



FEATURES

- 20W, 50W and 250W magnetic transformers.
- ETR12, ETR12-20: 120V AC Input to 12V AC Output
- ETR-277: 277V AC input to 120V AC output
- UL recognized.

DIMENSIONS

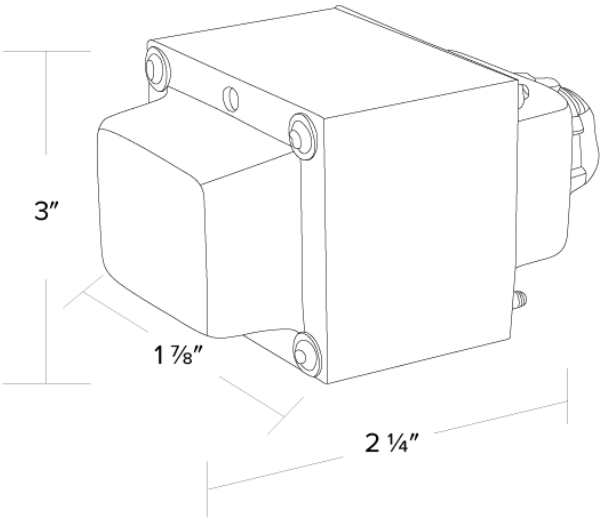

SPECIFICATIONS

Wattage	50 · 20 · 250 W
Voltage	277V · 120V ➔ 12V
Transformer type	Magnetic Transformer

ITEM NUMBERS

ITEM NUMBER	WATTS	VOLTAGE	TRANSFORMER TYPE
ETR12	50W	120V ➔ 12V	Magnetic Transformer
ETR12-20	20W	120V ➔ 12V	Magnetic Transformer
ETR-277	250W	277V	—

Item page
elcolighting.com/items/magnetic-transformers-120v-and-277v-12v-or-277v-120v
Every item number, IES files, downloads and the latest revision.

PART OF THESE FAMILIES

Magnetic and Electronic Transformers

© ELCO Lighting 2026. All rights reserved • Rev. 13 Nov 2026 • ELCO Lighting reserves the right to make specification and design changes without notice.