ELCO Lighting

Project Name:

Fixture Type:

Date:

LOW VOLTAGE MICRO STYLE MR16 BIPIN

Halogen Lamp Fixtures

ITEM NUMBER **ET559B**



FEATURES

- Use with 1 or 2 circuit track and accessories.
- Includes Transformer.
- Lamp: 50W MR16 12V.
- This track head comes standard as H Style. J (Juno) and L (Lightolier) styles are available: For J style please order PJTLO (W/B) with the track head. For L style please order PLTLO (W/B) with the track head. Note these must be factory installed.

DIMENSIONS

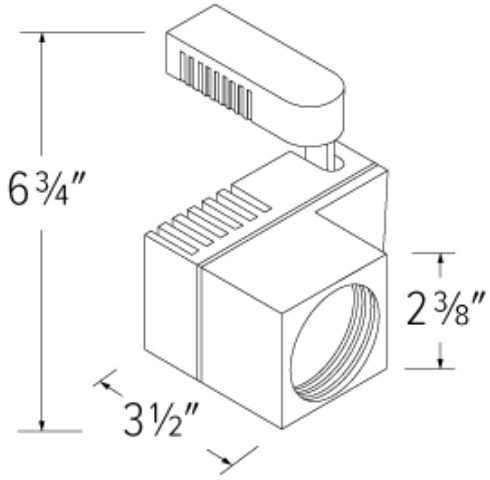

SPECIFICATIONS

Wattage	50W
Voltage	12V

FINISHES



Black

Item page
elcolighting.com/items/low-voltage-micro-style-mr16-bipin
Every item number, IES files, downloads and the latest revision.

PART OF THESE FAMILIES

MR16 GU5.3 Low Voltage Track Fixtures

Dimmer compatibility list

elcolighting.com · Dimmer Compatibility List

TECHNICAL DETAILS

Construction: Track fixture with a powder coated finish.

Adjustability: Track head is adjustable 180° vertically with 358° rotation.

Lamp: Compatible with BiPin GU5.3 MR16 lamps. (Lamp not included).

Installation: Installs into H-Style track from ELCO or others. Compatible with Single and two circuit track. Can be special ordered as J-Style (requires PJTLO W/B) or L-Style (requires PLTLO W/B).

Electrical: Solid state electronic Low Voltage Transformer is compatible with 20W to 50W lamps or 20W to 75W lamps. Designed for noiseless operation.

Dimmability: Works with 120V electronic low voltage rated dimmers. Dims down to 10%. For full list of dimmers, refer to the Dimmer Compatibility List.

Listings:

- ETL Listed
- RoHS Compliant

© ELCO Lighting 2026. All rights reserved • Rev. 25 Sep 2026 • ELCO Lighting reserves the right to make specification and design changes without notice.