ELCO Lighting

Project Name:

Fixture Type:

Date:

LOUVERED FACEPLATE REPLACEMENTS

Fixture · 3 finishes

Replacement louvered faceplate for the ELST42 Incandescent Step Light, 9 1/2″ W x 5″ H, in White, Black or Bronze.



FEATURES

- Faceplate for ELST42 Series
- 9 1/2″W x 5″H

DIMENSIONS

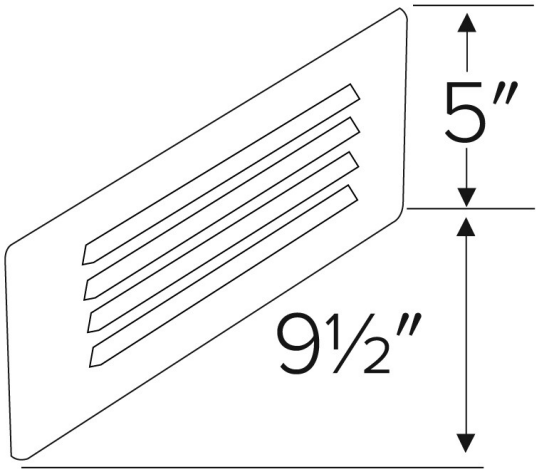

ITEM NUMBERS

ITEM NUMBER	FINISH
ELST10B	Black
ELST10BZ	Bronze
ELST10W	White

FINISHES



Black



Bronze



White

Item page
elcolighting.com/items/louvered-faceplate-replacements
Every item number, IES files, downloads and the latest revision.

PART OF THESE FAMILIES

Incandescent Step Lights

© ELCO Lighting 2026. All rights reserved • Rev. 19 Nov 2026 • ELCO Lighting reserves the right to make specification and design changes without notice.