ELCO Lighting

Project Name:

Fixture Type:

Date:

LIVE END CONNECTOR TRACK ACCESSORY

Track Connectors · 2 finishes



FEATURES

•Live End Connector for 2 Circuit Track to start a run.

DIMENSIONS

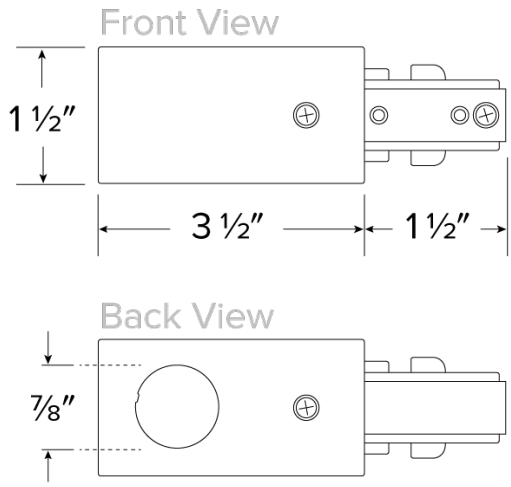

ITEM NUMBERS

ITEM NUMBER	FINISH
EC801B	Black
EC801W	White

FINISHES



Black



White

Item page
elcolighting.com/items/live-end-connector-track-accessory-0
Every item number, IES files, downloads and the latest revision.

PART OF THESE FAMILIES

Two Circuit Track

© ELCO Lighting 2026. All rights reserved • Rev. 26 Sep 2026 • ELCO Lighting reserves the right to make specification and design changes without notice.