ELCO Lighting

Project Name:

Fixture Type:

Date:

LIVE END CONDUIT CONNECTOR TRACK ACCESSORY

Track Connectors · 2 finishes



FEATURES

- Live End Connector for 2 Circuit Track .
- To start a run with surface conduit.

DIMENSIONS

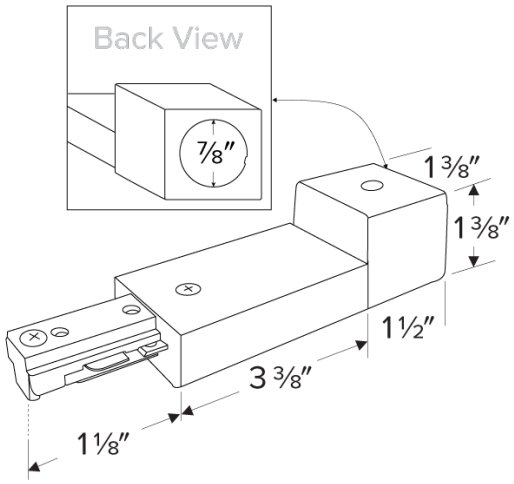

ITEM NUMBERS

ITEM NUMBER	FINISH
EC880B	Black
EC880W	White

FINISHES

Black

White

Item page
elcolighting.com/items/live-end-conduit-connector-track-accessory
Every item number, IES files, downloads and the latest revision.

PART OF THESE FAMILIES

Two Circuit Track

© ELCO Lighting 2026. All rights reserved • Rev. 16 Oct 2026 • ELCO Lighting reserves the right to make specification and design changes without notice.