ELCO Lighting

Project Name:

Fixture Type:

Date:

LINE VOLTAGE GU10 MONOPOINT FIXTURE MR16

Monopoint · 2 finishes



FEATURES

• Lamp: 50W 120V GU10 MR16 LED or Halogen

DIMENSIONS

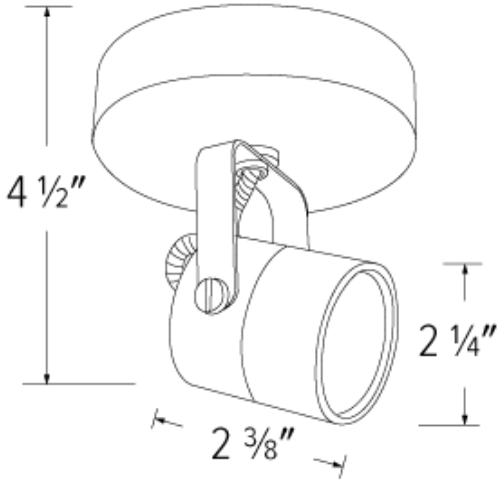

SPECIFICATIONS

Wattage	50W
Voltage	120V

ITEM NUMBERS

ITEM NUMBER	WATTS	VOLTAGE	FINISH
ET1728W	50W	120V	White
ET1728B	50W	120V	Black

FINISHES


White


Black

Item page
elcolighting.com/items/line-voltage-gu10-monopoint-fixture-mr16
Every item number, IES files, downloads and the latest revision.

PART OF THESE FAMILIES

Monopoints

TECHNICAL DETAILS

Construction: Track fixture with a powder coated finish.

Adjustability: Track head is adjustable 180°, 90° tilt with 358° rotation.

Lamp: Compatible with GU10 MR16 LED or Halogen lamps. (Lamp not included).

Installation: Installed into standard 4" octagon boxes.

Dimmability: Refer to lamp manufacturer's specifications for dimmer compatibility.

Listings:

- ETL Listed
- RoHS Compliant

© ELCO Lighting 2026. All rights reserved • Rev. 25 Sep 2026 • ELCO Lighting reserves the right to make specification and design changes without notice.