ELCO Lighting

Project Name:

Fixture Type:

Date:

LINE VOLTAGE GU10 CROWN™ TRACK FIXTURE MR16

GU10 · 2 finishes



FEATURES

- Metal housing.
- 90° vertical adjustment, 358° rotation.
- Use with ELCO 120V Single or Two Circuit Track or 120V Monopoint.
- Lamp: GU10 MR16 LED or MR16 Halogen.
- This track head comes standard as H Style. J (Juno) and L (Lightolier) styles are available: For J style please order PJTHI (W/B) with the track head. For L style please order PLTHI (W/B) with the track head. Note these must be factory installed.

DIMENSIONS

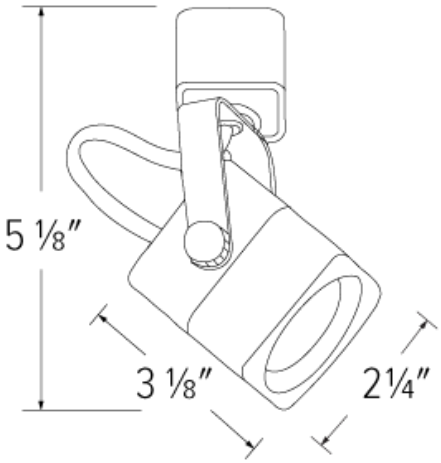

SPECIFICATIONS

Wattage	50W
Voltage	120V
Dimming	Triac/ELV
Lamp type	GU10

ITEM NUMBERS

ITEM NUMBER	LAMP TYPE	WATTS	VOLTAGE	DIMMING	FINISH
ET1632B	GU10	50W	120V	Triac/ELV	Black
ET1632W	GU10	50W	120V	Triac/ELV	White

FINISHES


Black


White

Item page
elcolighting.com/items/line-voltage-gu10-crown-track-fixture-mr16
Every item number, IES files, downloads and the latest revision.

PART OF THESE FAMILIES

GU10 Line Voltage Track Lighting

TECHNICAL DETAILS

Construction: Track fixture with a powder coated finish.

Adjustability: Track head is adjustable 180° vertically with 358° rotation.

Lamp: Compatible with LED and non-LED GU10 MR16 or MR16 halogen, lamp (not included).

Installation: Installs into H-Style track from ELCO or others.

Compatible with Single and two circuit track. Can be special ordered as J-Style (requires PJTLO W/B) or L-Style (requires PLTLO W/B).

Socket: High quality Porcelain GU10 Socket.

Dimmability: Triac and ELV dimmable based on lamp.

Listings:

- ETL Listed
- RoHS Compliant

© ELCO Lighting 2026. All rights reserved • Rev. 13 Oct 2026 • ELCO Lighting reserves the right to make specification and design changes without notice.