ELCO Lighting

Project Name:

Fixture Type:

Date:

LED HALOGEN MR16 GU10 LAMP

Lamp

ITEM NUMBER **MR120-GU10LD**



FEATURES

• MR16 LED lamp with GU10 base, dimmable.

DIMENSIONS

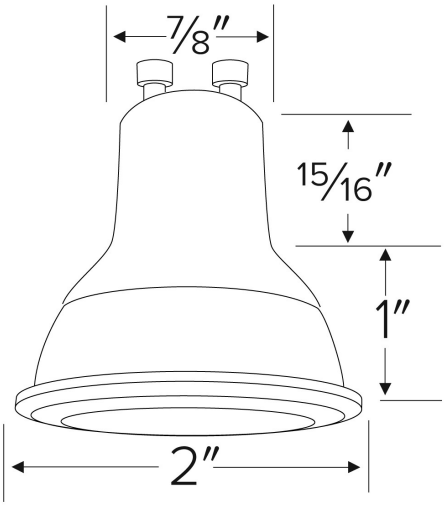

SPECIFICATIONS

Wattage	7W
Lumens	500 lm
Voltage	120V
Color temp.	3000K
Lamp type	GU10
CRI	90+

Item page
elcolighting.com/items/led-halogen-mr16-gu10-lamp
Every item number, IES files, downloads and the latest revision.

PART OF THESE FAMILIES

Lamps

© ELCO Lighting 2026. All rights reserved • Rev. 24 Jun 2026 • ELCO Lighting reserves the right to make specification and design changes without notice.