ELCO Lighting

Project Name:

Fixture Type:

Date:

LED EXIT SIGN AND LED EMERGENCY LIGHT COMBO

Fixture



FEATURES

- Combination Exit Sign with two Adjustable 2W LED Light Heads.
- Sealed maintenance free battery backup.
- Sturdy thermoplastic housing.
- Single or double face with 6″ letters.
- cUL or ETL Listed.
- Warranty: 5 years limited.

DIMENSIONS

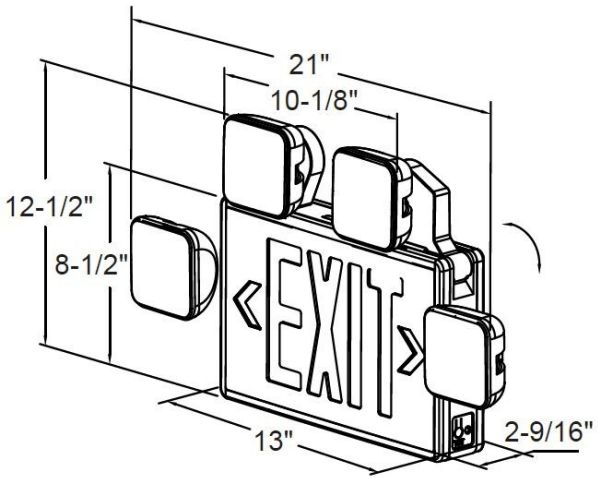

SPECIFICATIONS

Voltage	120-277V
Lamp type	LED
Letter color	Green · Red & Green

ITEM NUMBERS

ITEM NUMBER	VOLTAGE	LETTER COLOR
EE94HRG	120-277V	Red & Green
EE94HG	120-277V	Green

Item page
elcolighting.com/items/led-exit-sign-and-led-emergency-light-combo-1
Every item number, IES files, downloads and the latest revision.

PART OF THESE FAMILIES

Exit Signs · Emergency Lights

© ELCO Lighting 2026. All rights reserved • Rev. 28 Sep 2026 • ELCO Lighting reserves the right to make specification and design changes without notice.