ELCO Lighting

Project Name:

Fixture Type:

Date:

LED EXIT SIGN AND LED EMERGENCY LIGHT COMBO

Fixture



FEATURES

- Injection-molded thermoplastic ABS and PC housing resists impacts, scratches and corrosion.
- Red or green letters, 6″ letter height with 3/4″ stroke. Single or double face configuration.
- Two fully adjustable LED emergency heads.
- 120/277V AC Dual voltage operation. Low power consumption 2.8 watts at normal operation (2 x 1W heads).
- Ni-Cad Battery 4.8V 1.0Ah. 90 minutes battery backup.
- Universal back, side, or ceiling mounting.
- Housing snaps to canopy with simple twist, locking it tightly and securely.
- UL Listed (US and Canada).

DIMENSIONS

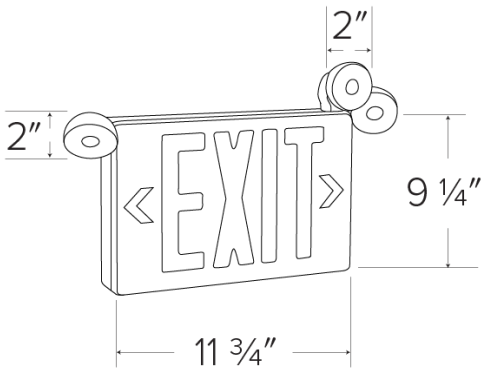

SPECIFICATIONS

Voltage	120-277V
Letter color	Green · Red · Red & Green

ITEM NUMBERS

ITEM NUMBER	VOLTAGE	LETTER COLOR
EE86HRG	120-277V	Red & Green

Item page
elcolighting.com/items/led-exit-sign-and-led-emergency-light-combo
Every item number, IES files, downloads and the latest revision.

PART OF THESE FAMILIES

Exit Signs · Emergency Lights

© ELCO Lighting 2026. All rights reserved • Rev. 13 Nov 2026 • ELCO Lighting reserves the right to make specification and design changes without notice.