ELCO Lighting

Project Name:

Fixture Type:

Date:

LED EMERGENCY LIGHT

Fixture

ITEM NUMBER **EE80L**



FEATURES

- Mini Emergency Light with two 2W fully adjustable glare-free square shape light heads for emergency light.
- Injection-molded thermoplastic ABS housing. Snap-together design allows for fast and easy installation.
- 250 lm (total) 3.6V, 1.5Ah battery pack for 90 minutes of emergency operation.
- LED Driver: 120V/277V AC, dual voltage operation integrated with LED bulb.
- cUL listed for damp location.

DIMENSIONS

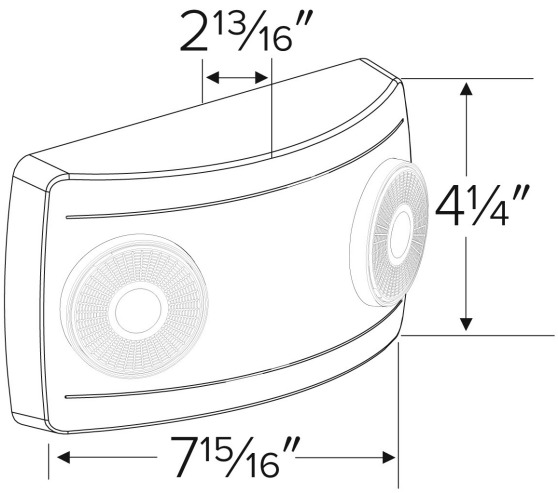

SPECIFICATIONS

Wattage	4W
Voltage	120-277V

Item page
elcolighting.com/items/led-emergency-light
Every item number, IES files, downloads and the latest revision.

PART OF THESE FAMILIES

Emergency Lights

© ELCO Lighting 2026. All rights reserved • Rev. 26 Sep 2026 • ELCO Lighting reserves the right to make specification and design changes without notice.