ELCO Lighting

Project Name:

Fixture Type:

Date:

LED EDGE LIT EXIT SIGN WITH BATTERY BACKUP

Fixture



FEATURES

- Single clear acrylic face or Double mirrored acrylic faced LED Exit Signs
- Green or Red letters and arrows
- 120V/277V with 90 min. emergency battery backup
- 24 hours to recharge after being discharged
- Test switch and charge rate indicator
- Wall or ceiling mount
- cUL listed
- **CA Title 20 Certified**
- Warranty: 5 years limited.

DIMENSIONS

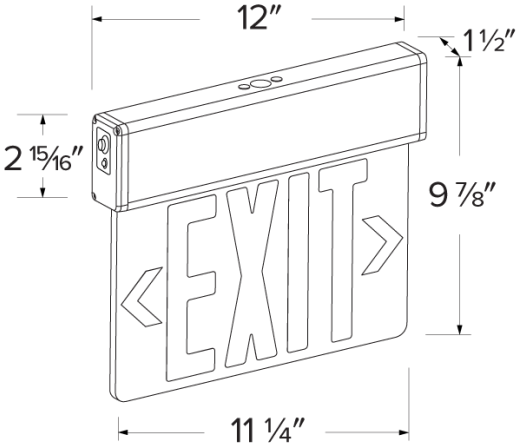

SPECIFICATIONS

Lamp type	LED
Face type	Single Face · Double Face

ITEM NUMBERS

ITEM NUMBER	LAMP TYPE	FINISH	FACE TYPE
EDGLIT1RG	LED	Red & Green Letters	Single Face
EDGLIT2RG	LED	Red & Green Letters	Double Face

FINISHES

Red & Green Letters

Item page
elcolighting.com/items/led-edge-lit-exit-sign-battery-backup
Every item number, IES files, downloads and the latest revision.

PART OF THESE FAMILIES

Exit Signs

© ELCO Lighting 2026. All rights reserved • Rev. 13 Nov 2026 • ELCO Lighting reserves the right to make specification and design changes without notice.