ELCO Lighting

Project Name:

Fixture Type:

Date:

LED ADJUSTABLE EMERGENCY LIGHT

Fixture



ITEM NUMBER **EE22L**

FEATURES

- Emergency Light with two Adjustable 1.5W LED glare free light heads.
- 120/277V.
- Universal mounting plate for fast and easy installation.
- Sturdy thermoplastic housing.
- Automatic switching from AC supply to battery power.
- Long-life Ni-Cad battery.
- UL Listed (US and Canada) for damp location.

DIMENSIONS

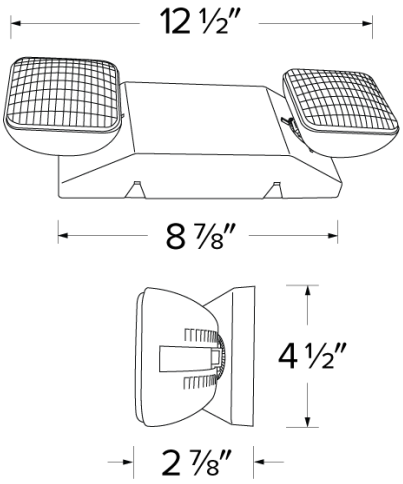

SPECIFICATIONS

Wattage	3W
Voltage	120-277V

FINISHES

White

Item page
elcolighting.com/items/led-adjustable-emergency-light
Every item number, IES files, downloads and the latest revision.

PART OF THESE FAMILIES

Emergency Lights

© ELCO Lighting 2026. All rights reserved • Rev. 26 Sep 2026 • ELCO Lighting reserves the right to make specification and design changes without notice.