ELCO Lighting

Project Name:

Fixture Type:

Date:

KOTO™ PEEK MULTIPLES SINGLE HEAD HOUSING

Frames & Power Packs

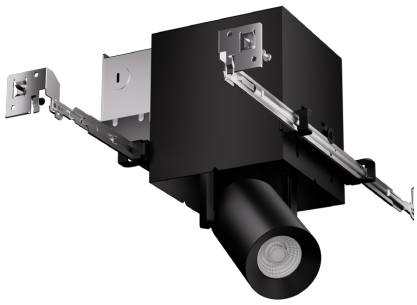

FEATURES

• Sunset dim-to-warm (Optional)

SPECIFICATIONS

Lumens	350 · 750 · 850 · 950 · 1050 · 1150 · 1350 · 1500 lm
Voltage	120V · 120-277V
Color temp.	2700K · 3000K · 2400K · 3500K · 4000K · Sunset · Human Centric · CCT Switch: 2700K, 3000K, 3500K, 4000K, 5000K · Tunable White 4000K - 1800K
Dimming	Triac/ELV · 0-10V/Triac/ELV · DALI 2
Beam angle	38° · 18° · 25° · 60° · 90° · 10° · 18° - 50°
Color finish	White · Black

Item page
elcolighting.com/items/koto-peek-multiples-single-head-housing
Every item number, IES files, downloads and the latest revision.

PART OF THESE FAMILIES

Koto™ Peek Multiples

PRODUCT NUMBER BUILDER

Specify **Koto™ Peek Multiples Single Head Housing** item number (Select one) Example: **E2PMA1W-0327** Your item number:

ITEM	COLOR FINISH	LUMENS	CCT	BEAM ANGLE	DIMMING
E2PMA1	**W** White **BB** Black	**-03** 350 lm (5W) **-07** 750 lm (10.5W) **-09** 950 lm (10.5W) **-11** 1150 lm (12.5W) **-13** 1350 lm (12.5W) **-15** 1500 lm (14W) **-08** 850 lm (10.5W) **-10** 1050 lm (12.5W) **-08** 850 lm (12.5W)	**27** 2700K **30** 3000K **24** 2400K **35** 3500K **40** 4000K **SD** Sunset **HC** Human Centric **CT5** CCT Switch: 2700K, 3000K, 3500K, 4000K, 5000K **41** Tunable White 4000K - 1800K	38° **-S** 18° **-N** 25° **-W** 60° **-E** 90° **-T** 10° **-FC** 18° - 50°	Triac/ELV **X** 0-10V/Triac/ELV **A** DALI 2

© ELCO Lighting 2026. All rights reserved • Rev. 19 Oct 2026 • ELCO Lighting reserves the right to make specification and design changes without notice.