ELCO Lighting

Project Name:

Fixture Type:

Date:

KOTO™ MULTIPLES TRIMLESS (SINGLE HEAD)

Trim · 2 finishes

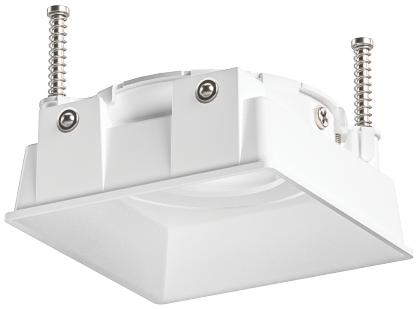

DIMENSIONS

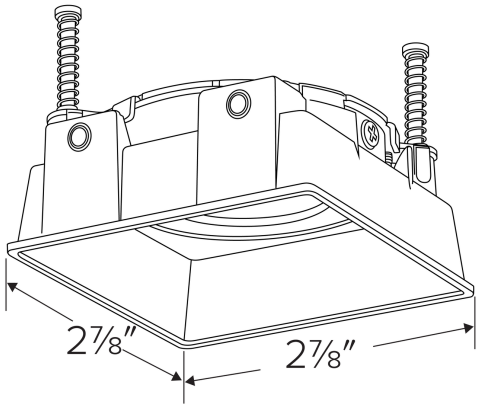

Koto™ Multiples Trimless (Single Head)

SPECIFICATIONS

Part type	Trim · Spackle Frame

ITEM NUMBERS

ITEM NUMBER	FINISH	PART TYPE
EKCM230A1BB	Black	Trim
EKCM230A1W	White	Trim
EKCM2SFA1	—	Spackle Frame

FINISHES

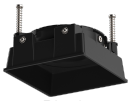
Black


White

Item page
elcolighting.com/items/koto-multiples-trimless-single-head
Every item number, IES files, downloads and the latest revision.

PART OF THESE FAMILIES

Canless Koto™ Multiples · Standard Koto™ Multiples

© ELCO Lighting 2026. All rights reserved • Rev. 19 Oct 2026 • ELCO Lighting reserves the right to make specification and design changes without notice.