ELCO Lighting

Project Name:

Fixture Type:

Date:

KOTO™ LANDSCAPE IN-GROUND — 12V AC

Fixture · 3 finishes



FEATURES

- Sunset dim-to-warm (Optional)
- Field-Replaceable Koto™ Module for Easy Upgrades & Maintenance
- Field Changeable Secondary Optics
- Drive-Over Rated Solid Brass Face Plate
- Black, Brass or Stainless Steel Finish
- IP67 Rated, Optional Concrete Pour Housing

DIMENSIONS

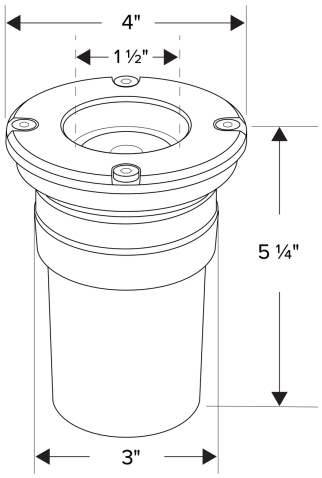

Koto™ Landscape In-Ground — 12V AC

SPECIFICATIONS

Lumens	850 lm (10.5W)
Color temp.	2700K · 3000K · Sunset
Beam angle	25° · 38° · 90° · 18° · 60°

FINISHES

Black · Brass · Stainless Steel

Item page
elcolighting.com/items/koto-landscape-ground-12v-ac
Every item number, IES files, downloads and the latest revision.

PART OF THESE FAMILIES

Koto™ Landscape In-Ground

© ELCO Lighting 2026. All rights reserved • Rev. 03 Nov 2026 • ELCO Lighting reserves the right to make specification and design changes without notice.