ELCO Lighting

Project Name:

Fixture Type:

Date:

# KOTO™ LANDSCAPE IN-GROUND — 120V, TRIAC/ELV/0-10V

**Fixture · 3 finishes**



## FEATURES

- Sunset dim-to-warm (Optional)
- Field-Replaceable Koto™ Module for Easy Upgrades & Maintenance
- Field Changeable Secondary Optics
- Drive-Over Rated Solid Brass Face Plate
- Black, Brass or Stainless Steel Finish
- IP67 Rated, Optional Concrete Pour Housing

## DIMENSIONS

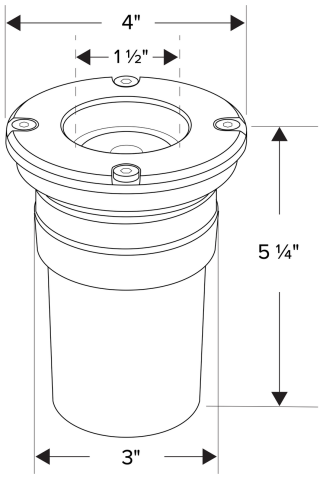


Koto™ Landscape In-Ground — 120V, Triac/ELV/0-10V

## SPECIFICATIONS

| | |
|---|---|
| Lumens | 1050 lm (12.5W) |
| Color temp. | 2700K · 3000K · 3500K · 4000K · Sunset |
| Beam angle | 38° · 90° · 25° · 18° · 60° |

## FINISHES

Black · Brass · Stainless Steel

**Item page**
elcolighting.com/items/koto-landscape-ground-120v-triacelv0-10v
Every item number, IES files, downloads and the latest revision.

## PART OF THESE FAMILIES

Koto™ Landscape In-Ground


© ELCO Lighting 2026. All rights reserved • Rev. 03 Nov 2026 • ELCO Lighting reserves the right to make specification and design changes without notice.