ELCO Lighting

Project Name:

Fixture Type:

Date:

# KOTO™ LANDSCAPE IN-GROUND — 120V, TRIAC/ELV

**Fixture · 3 finishes**



## FEATURES

- Sunset dim-to-warm (Optional)
- Field-Replaceable Koto™ Module for Easy Upgrades & Maintenance
- Field Changeable Secondary Optics
- Drive-Over Rated Solid Brass Face Plate
- Black, Brass or Stainless Steel Finish
- IP67 Rated, Optional Concrete Pour Housing

## DIMENSIONS

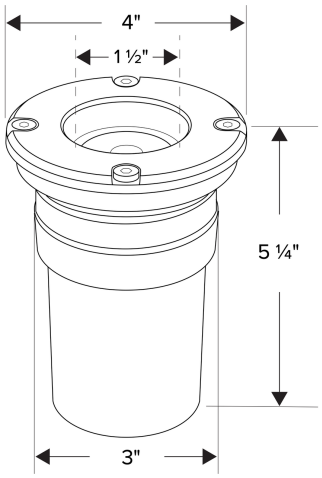


Koto™ Landscape In-Ground — 120V, Triac/ELV

## SPECIFICATIONS

| | |
|---|---|
| Lumens | 350 · 750 · 850 · 950 · 1050 · 1150 · 1350 · 1500 lm |
| Color temp. | 2700K · 3000K · 2400K · 3500K · 4000K · CCT Switch: 2700K, 3000K, 3500K, 4000K, 5000K · Sunset · Human Centric |
| Beam angle | 38° · 90° · 25° · 18° · 10° · 60° |

## FINISHES

Black · Brass · Stainless Steel

**Item page**
elcolighting.com/items/koto-landscape-ground-120v-triacelv
Every item number, IES files, downloads and the latest revision.

## PART OF THESE FAMILIES

Koto™ Landscape In-Ground


© ELCO Lighting 2026. All rights reserved • Rev. 13 Oct 2026 • ELCO Lighting reserves the right to make specification and design changes without notice.