ELCO Lighting

Project Name:

Fixture Type:

Date:

KOTO™ LANDSCAPE BULLET — 120V, TRIAC/ELV/0-10V

Fixture · 2 finishes



FEATURES

- Sunset dim-to-warm (Optional)
- Field-Replaceable Koto™ Module for Easy Upgrades & Maintenance
- Field Changeable Secondary Optics
- Solid Brass Construction, Black or Brass Finish
- Full 180° Tilt with Locking Adjustment
- IP65 Rated for Outdoor Use

DIMENSIONS

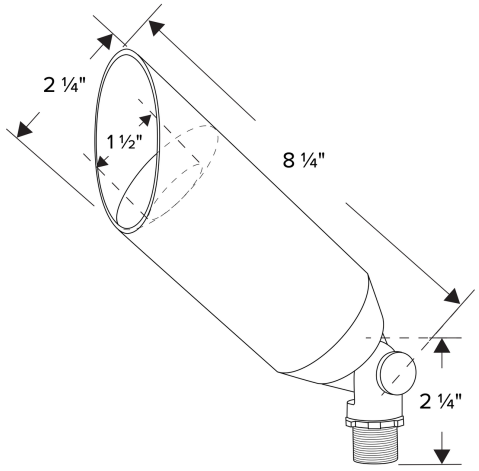

Koto™ Landscape Bullet — 120V, Triac/ELV/0-10V

SPECIFICATIONS

Lumens	1050 lm (12.5W)
Color temp.	2700K · 3000K · 3500K · 4000K · Sunset
Beam angle	38° · 90° · 25° · 18° · 60°

FINISHES

Black

Brass

Item page
elcolighting.com/items/koto-landscape-bullet-120v-triacelv0-10v
Every item number, IES files, downloads and the latest revision.

PART OF THESE FAMILIES

Koto™ Landscape Bullet

© ELCO Lighting 2026. All rights reserved • Rev. 03 Nov 2026 • ELCO Lighting reserves the right to make specification and design changes without notice.