ELCO Lighting

Project Name:

Fixture Type:

Date:

JUNCTION BOX WITHOUT HANGER BARS

Housing

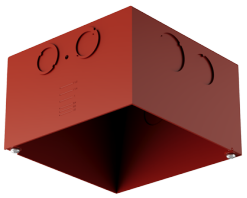

FEATURES

- Metallic junction box constructed from 16 gauge galvanized steel.
- Can be installed in maximum 2 hour fire-rated ceiling assemblies that adhere to International Building Code Section 714.
- ELJ443 - Square Standard Deep Junction Box

DIMENSIONS

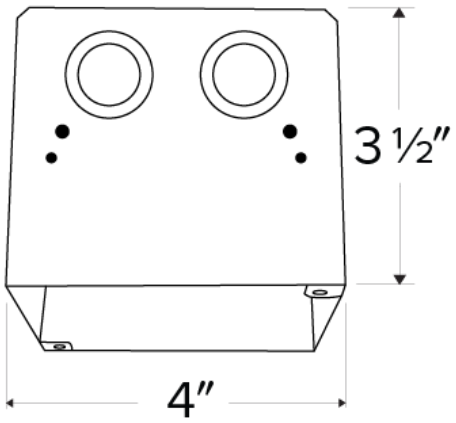

ELJ443 Dimensions

SPECIFICATIONS

Dimensions	4" Sq. x 3 1/2" H

ITEM NUMBERS

ITEM NUMBER	DIMENSIONS
ELJ443	4" Sq. x 3 1/2" H

Item page
elcolighting.com/items/junction-box-without-hanger-bars
Every item number, IES files, downloads and the latest revision.

PART OF THESE FAMILIES

LED Disk Lights

© ELCO Lighting 2026. All rights reserved • Rev. 01 Nov 2026 • ELCO Lighting reserves the right to make specification and design changes without notice.