ELCO Lighting

Project Name:

Fixture Type:

Date:

INCANDESCENT BRICK LIGHT WITH ANGLED LOUVER FACEPLATE

Fixture · Rectangular · 3 finishes

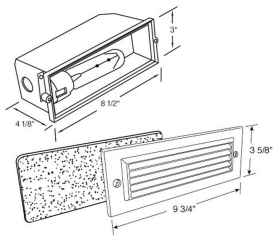

FEATURES

•Diecast aluminum housing with diffused glass lens.
•Lamp: 40W T10 (not included).
•Hole Cutout: 8 3/4"W x 3 1/4"H.
•UL Listed (US and Canada) for wet location and for poured concrete.

DIMENSIONS

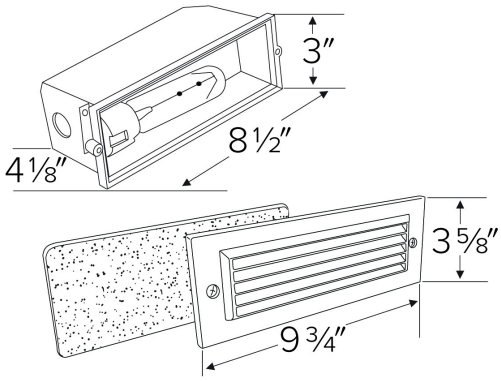

SPECIFICATIONS

Wattage	40W
Voltage	120V
Lamp type	Medium Base (E26)
Shape	Rectangular

ITEM NUMBERS

ITEM NUMBER	LAMP TYPE	WATTS	VOLTAGE	FINISH	SHAPE
ELST31W	Medium Base (E26)	40W	120V	White	Rectangular
ELST31B	Medium Base (E26)	40W	120V	Black	Rectangular
ELST31BZ	Medium Base (E26)	40W	120V	Bronze	Rectangular

FINISHES

Bronze

White

Black

Item page
elcolighting.com/items/incandescent-brick-light-angled-louver-faceplate
Every item number, IES files, downloads and the latest revision.

PART OF THESE FAMILIES

Incandescent Brick Lights

© ELCO Lighting 2026. All rights reserved • Rev. 19 Oct 2026 • ELCO Lighting reserves the right to make specification and design changes without notice.