ELCO Lighting

Project Name:

Fixture Type:

Date:

IN-GROUND SLEEVE

Accessory

ELCO's energy efficient In-Ground LED fixtures are water and weather resistant making them the perfect lighting solution for virtually any in-ground application.

ITEM NUMBER **ELIGRH**



FEATURES

- Weather resistant in-ground sleeve
- Suitable for concrete or soil installation

DIMENSIONS

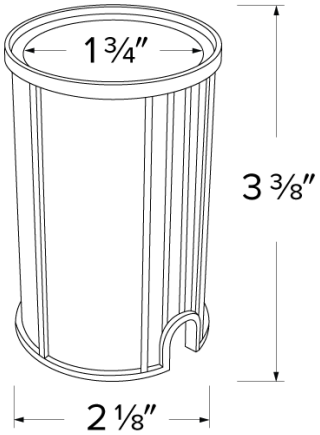

Item page
elcolighting.com/items/ground-sleeve
Every item number, IES files, downloads and the latest revision.

PART OF THESE FAMILIES

In-Ground LED Lighting

© ELCO Lighting 2026. All rights reserved • Rev. 19 Oct 2026 • ELCO Lighting reserves the right to make specification and design changes without notice.