ELCO Lighting

Project Name:

Fixture Type:

Date:

FLEXIBLE CONNECTOR TRACK ACCESSORY

Track Connectors · 2 finishes



FEATURES

•Flexible Connector for 2 Circuit Track.
•Joins two track sections at an angle up to 90° in either plane.
• Power feedable connector.

DIMENSIONS

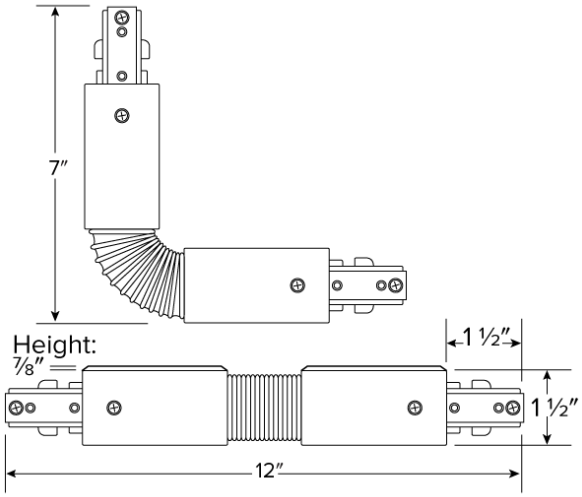

ITEM NUMBERS

ITEM NUMBER	FINISH
EC802B	Black
EC802W	White

FINISHES

Black

White

Item page
elcolighting.com/items/flexible-connector-track-accessory-0
Every item number, IES files, downloads and the latest revision.

PART OF THESE FAMILIES

Two Circuit Track

© ELCO Lighting 2026. All rights reserved • Rev. 26 Sep 2026 • ELCO Lighting reserves the right to make specification and design changes without notice.