ELCO Lighting

Project Name:

Fixture Type:

Date:

FLEXIBLE CONNECTOR TRACK ACCESSORY

Track Connectors · 4 finishes

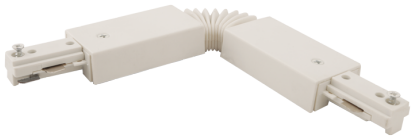

FEATURES

•Flexible Connector for 1 Circuit Track.
•Joins two track sections at an angle up to 90° in either plane.
•Can be used as a feed point.

DIMENSIONS

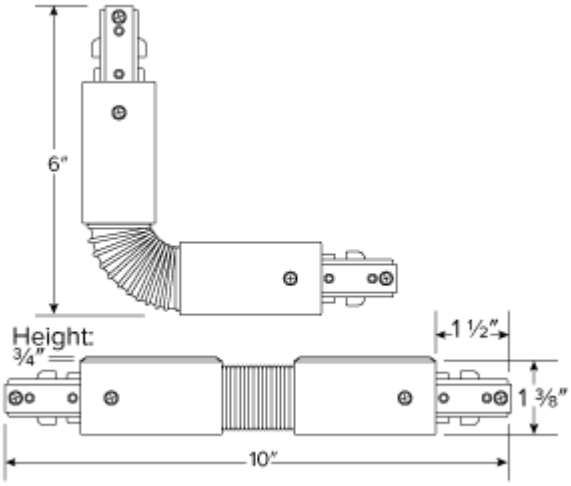

ITEM NUMBERS

ITEM NUMBER	FINISH
EP802B	Black
EP802BZ	Bronze
EP802N	Nickel
EP802W	White

FINISHES


Black


Bronze


Nickel


White

Item page
elcolighting.com/items/flexible-connector-track-accessory
Every item number, IES files, downloads and the latest revision.

PART OF THESE FAMILIES

Single Circuit Track

© ELCO Lighting 2026. All rights reserved • Rev. 26 Sep 2026 • ELCO Lighting reserves the right to make specification and design changes without notice.